FY 45 TF

Compliance with standard	ISO
Housing material	Cast iron
Sealing solution	Standard seals with additional flingers

Dimensions

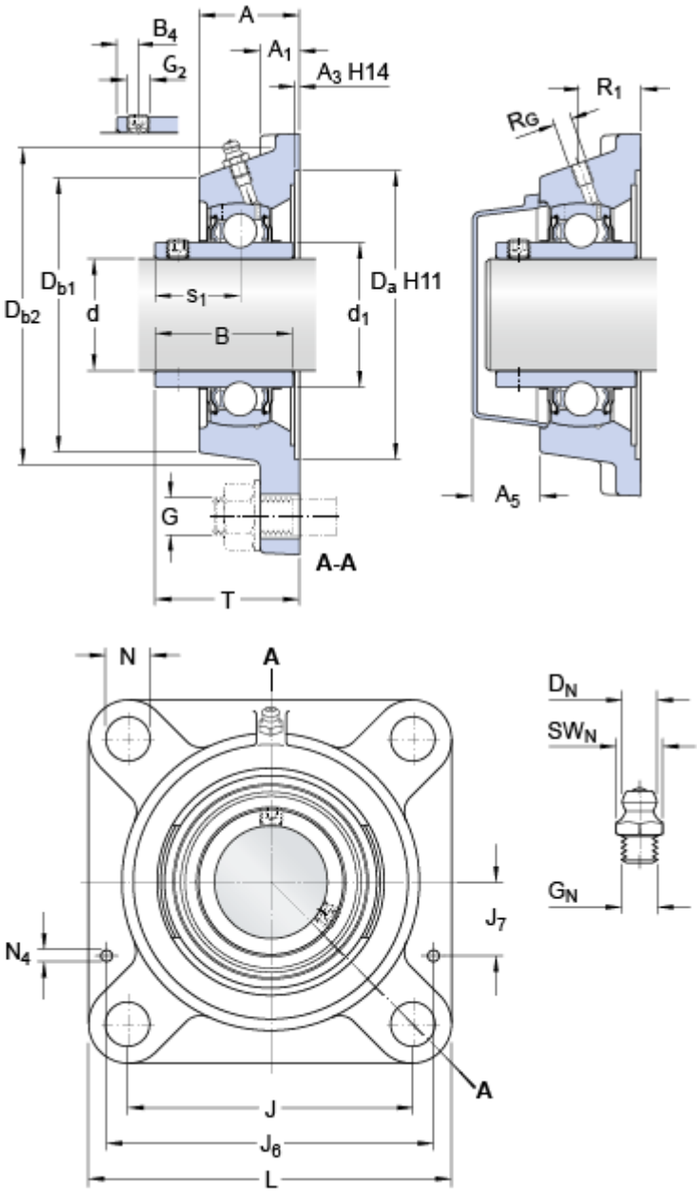

d		45	mm
d_1	≈	56.8	mm
A		39	mm
A_1		14	mm
A_3		3.2	mm
A_5		26.5	mm
B		49.2	mm
B_4		8	mm
D_a		119.1	mm
D_{b1}		102	mm
D_{b2}		112	mm
J		105	mm
L		137	mm
N		16	mm
s_1		30.2	mm
T		54.2	mm

Grease fitting

D_N	6.5	mm
SW_N	7	mm
G_N	1/4-28 SAE-LT	

Threaded hole

R_G	1/4-28 UNF	
R_1	24.5	mm

Dowel pins

	J_6	123	mm
	J_7	33.5	mm
	N_4	4	mm

Calculation data

Basic dynamic load rating	C	33.2	kN
Basic static load rating	C_0	21.6	kN
Fatigue load limit	P_u	0.915	kN
Limiting speed		4300	r/min
with shaft tolerance h6			

Mass

Mass bearing unit		1.9	kg

Mounting information

Thread grub screw	G_2	M8x1	
Hexagonal key size for grub screw	N	4	mm
Recommended tightening torque for grub screw		6.5	N·m
Recommended diameter for attachment bolts, mm	G	14	mm
Recommended diameter for attachment bolts, inch	G	0.5625	in

Included products

Housing	FY 509 M
Bearing	YAR 209-2F

Associated products

End cover	ECY 209