E61439

Draw-wire mechanism for encoders

DRAW WIRE 1900

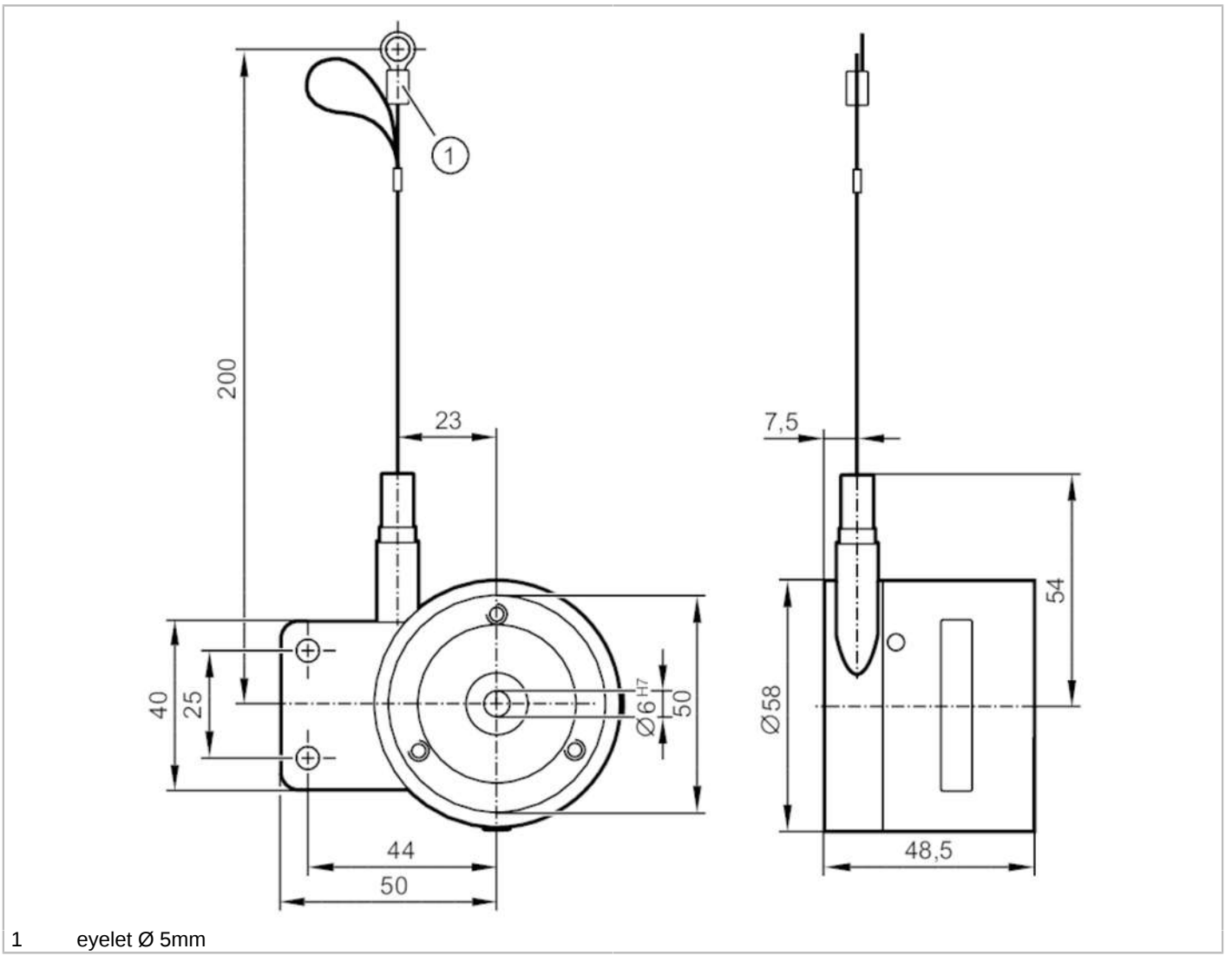

1 eyelet Ø 5mm

Product characteristics			
Shaft design			solid shaft
Shaft diameter	[mm]		6
Application			
Design			for encoders with 58 mm synchro flange and 6 mm solid shaft
Accuracy / deviations			
Accuracy			± 0.02 % FSO
Repeatability			± 0,006 % FSO
Operating conditions			
Ambient temperature	[°C]		-20...85
Storage temperature	[°C]		-40...85
Storage humidity	[%]		5...95; (non condensing)
Tests / approvals			
Shock resistance		IEC628-2-27	50 g / 10 ms
Vibration resistance		IEC68-2-6	20 g / 20..200 Hz
Mechanical data			
Weight	[g]		598.5

E61439

Draw-wire mechanism for encoders

DRAW WIRE 1900

Top flange diameter	[mm]	58		
Materials		housing: aluminium; wire: stainless steel polyamide coated		
Shaft design		solid shaft		
Shaft diameter	[mm]	6		
Max. measuring length	[mm]	1900		
Wire drum circumference	[mm]	150		
Wire diameter	[mm]	0.45		
Wire connection		5,5; (eyelet)		
Wire properties		max. speed of wire displacement	[m /s]	2
		max. wire acceleration	[g]	12
		max. extension force	[N]	5
		min. retraction force	[N]	3,5
Fixing flange		synchro-flange		

Remarks

Pack quantity		1 pcs.

E61439

Draw-wire mechanism for encoders

DRAW WIRE 1900

Diagrams and graphs

Installation instruction

