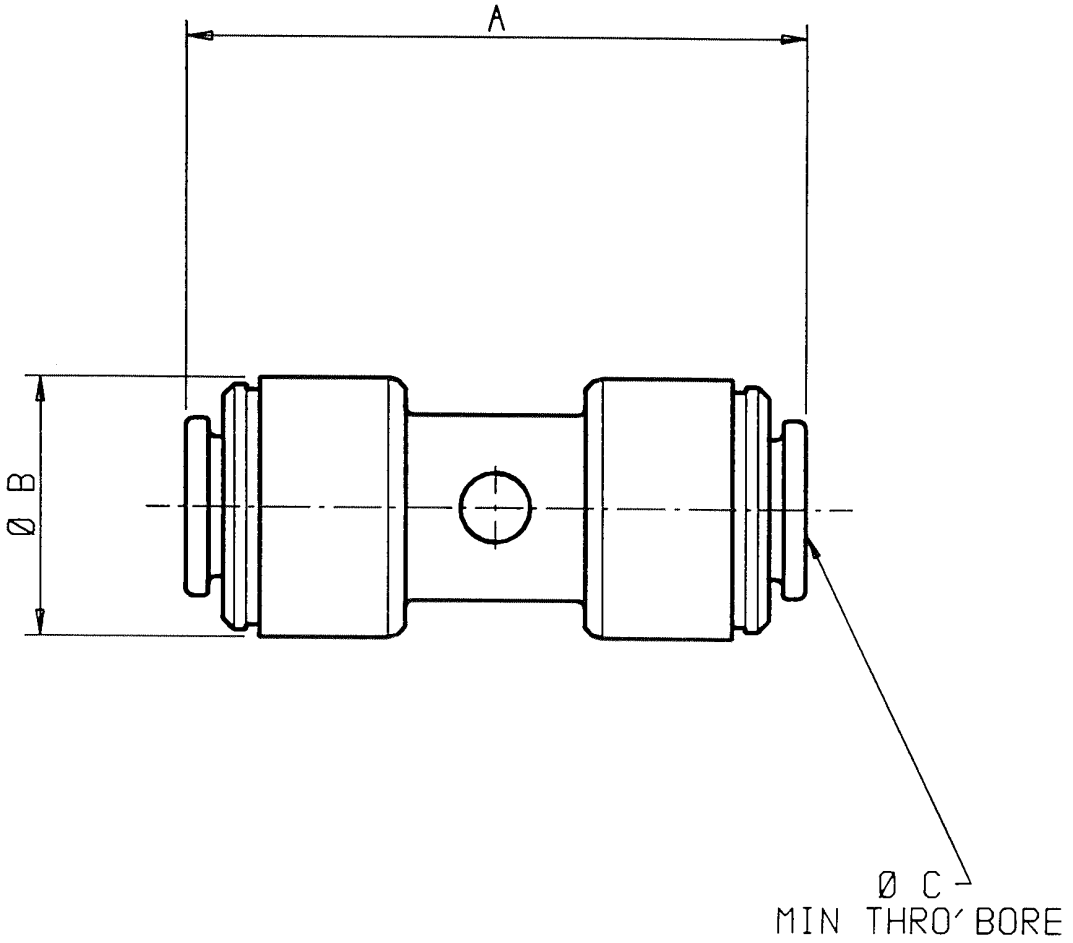

PRODUCT NO.	DESCRIPTION	A	Ø B	Ø C
PM200604E	6MM-4MM TUBE O.D.	35	15	2.5
PM200804E	8MM-4MM TUBE O.D.	42	18	2.5
PM200806E	8MM-6MM TUBE O.D.	42	18	5.0
PM201004E	10MM-4MM TUBE O.D.	42	20	2.5
PM201006E	10MM-6MM TUBE O.D.	42	20	5.0
PM201008E	10MM-8MM TUBE O.D.	42	20	6.5
PM201208E	12MM-8MM TUBE O.D.	53	23	6.4
PM201210E	12MM-10MM TUBE O.D.	54	24	7.6

ALL DIMENSIONS IN MM

RELEASE No. SA02-03-014 4/4/89

John Guest

THE COPYRIGHT HEREIN BELONGS TO JOHN GUEST LIMITED. THE INFORMATION GIVEN MUST NOT BE REPRODUCED WITHOUT WRITTEN CONSENT. © 1988

PRODUCT DATA SHEET DS-131

TITLE REDUCING STRAIGHT CONNECTORS (P RANGE)

ISSUE 2

DATE 27/02/89

Location: CCL-SA-SPE01
Release Number: 000000-C-FILX
CURRENT PRODUCTION
User: roses
Printed/Downloaded: 3 Mar 10,14:03
UNCONTROLLED IF PRINTED OR DOWNLOADED