KI0061

Capacitive sensor

KI-2200NBBOA/2P

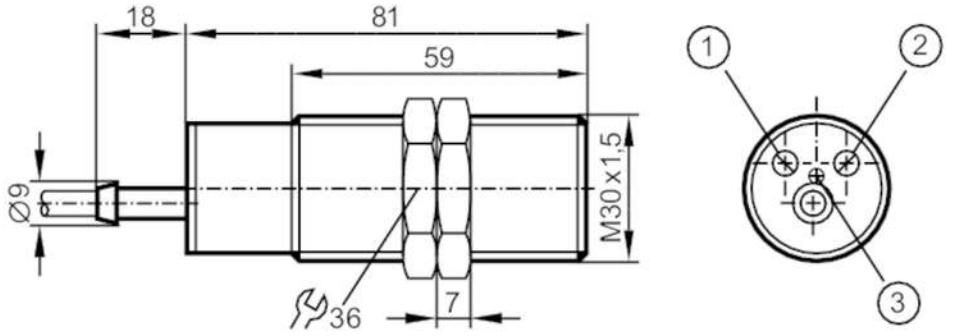

1 potentiometer Sensing range
2 potentiometer switching output delay
3 LED

Product characteristics		
Output function		normally closed
Sensing range	[mm]	20
Housing		threaded type
Dimensions	[mm]	M30 x 1.5 / L = 81
Electrical data		
Operating voltage	[V]	20...250 AC/DC
Current consumption	[mA]	< 20
Protection class		II
Reverse polarity protection		no
Outputs		
Output function		normally closed
Max. voltage drop switching output DC	[V]	8
Max. voltage drop switching output AC	[V]	10
Minimum load current	[mA]	5
Max. leakage current	[mA]	2.5 (250 V AC) / 1.7 (110 V AC) / 1.5 (24 V DC)
Permanent current rating of switching output AC	[mA]	200; (350 (...50 °C))
Permanent current rating of switching output DC	[mA]	200; (350 (...50 °C))
Short-time current rating of switching output	[mA]	2200; (20 ms / 0,5 Hz)
Switching frequency AC	[Hz]	10
Switching frequency DC	[Hz]	10
Short-circuit proof		no
Overload protection		no
Output holding time		adjustable (0...60 s)
Detection zone		
Sensing range	[mm]	20
Sensing range adjustable		yes

KI0061

Capacitive sensor

KI-2200NBBOA/2P

Factory setting sensing range	[mm]	20	
Real sensing range Sr	[mm]	20 ± 10 %	
Accuracy / deviations			
Hysteresis	[% of Sr]	1...15	
Switch point drift	[% of Sr]	-20...20	
Operating conditions			
Ambient temperature	[°C]	-25...80	
Note on ambient temperature		temperature of the sensing face: -25...110	
Protection		IP 65; IP 67	
Tests / approvals			
EMC		EN 61000-4-2 ESD	25 kV CD / 30 kV AD
		EN 61000-4-3 HF radiated	10 V/m
		EN 61000-4-4 Burst	2 kV
		EN 61000-4-5 Surge	0,5 kV line to line, Ri: 2 Ohm
		EN 61000-4-6 HF conducted	3 V
		EN 55011	class B
Vibration resistance			(10...55 Hz) / 1 mm amplitude, oscillation period 5 min., 30 min. per axis at resonance or 55 Hz
Shock resistance			30 g 6 shocks / 11 ms half-sine (x, y, z)
MTTF	[years]	221.4	
Mechanical data			
Weight	[g]	186.5	
Housing		threaded type	
Mounting		non-flush mountable	
Dimensions	[mm]	M30 x 1.5 / L = 81	
Thread designation		M30 x 1.5	
Materials		PBT	
Displays / operating elements			
Display		switching status	1 x LED, yellow
Electrical connection			
Required protection		miniature fuse to IEC60127-2 sheet 1; ≤ 2 A; fast acting	
Accessories			
Items supplied		lock nuts: 2	
		screwdriver: 1	
Remarks			
Remarks		Recommendation: Check the safe functioning of the unit after a short circuit.	
Pack quantity		1 pcs.	

KI0061

Capacitive sensor

KI-2200NBBOA/2P

Electrical connection

Cable: 2 m, PVC; 2 x 0.5 mm²

Connection

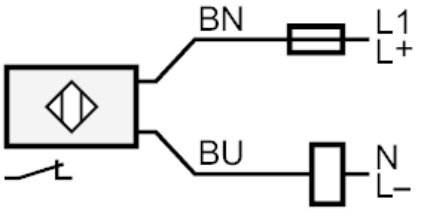

Note miniature fuse to IEC60127-2 sheet 1 ≤ 2 A fast acting
Core colours :

BN =	brown
BU =	blue