TECHNICAL DATA SHEET

This range of beacons incorporates a 144 off LED array that emits its light through 360° around the vertical axis. They have a choice of four modes of alarm that are pre-set via a two-way dip switch located under the lens. To maintain the ingress protection of the enclosure the lens should always be mounted above the base. The 201/200 series is suitable for surface, conduit box or wall mounting. The LED401/400 is suitable for surface or wall mounting.

Part Code:	Voltage:	Colours	Current:		
			Flashing	Rotating	Static
LED201-02	24v Dc ---	Red & Amber	210mA	130mA	440mA
		Green, Blue & Clear	115mA	50mA	230mA
LED200-04 •	90-370v Dc --- 70-265v Ac ~	Red & Amber	110/55mA	50/25mA	200/100mA
		Green, Blue & Clear	65/40mA	27/20mA	120/59mA
LED401-02	24v Dc ---	Red & Amber	210mA	130mA	440mA
		Green, Blue & Clear	115mA	50mA	230mA
LED400-04 •	90-370v Dc --- 70-265v Ac ~	Red & Amber	110/55mA	50/25mA	200/100mA
		Green, Blue & Clear	65/40mA	27/20mA	120/59mA
• Current @ 115/230v Ac ~ • Current @ 280v Dc --- Amber/Red in Static Mode is 40mA All Models Pre-set to Flash Mode			2 Bar Rotating		

For Lens colours add: -01 Amber, -02 Red, -03 Blue, -04 Green, -05 Clear

Key Features Include:

Note: The 201/200 series has the ability to be used in a 'loop in' 'loop out' daisy chain application using the terminals provided, however the wire size must not exceed 2.5mm².

- Connection terminals except upto 2.5mm² cable
- Multi Voltage high volt options
- Operating Temperature -25°c to +55°c
- Case Material is UV Stable Polycarbonate & UV Stable ABS
- Weatherproof to IP65
- AC = 50/60 Hz

Optional Equipment:

- 50004 Mounting Bracket
- 50010 Cage Guard (cannot be used in conjunction with mounting bracket)
- 50080 Anti Vibration Mount (201/200 Series)

MOFLASH SIGNALLING

INSTALLATION & TECHNICAL INFORMATION

PLEASE READ PRIOR TO INSTALLATION



LED201/200 & LED401/400 Series - (LED Array)

MULTI-FUNCTIONAL VISUAL SIGNALLING DEVICES

APPROVALS AND CONFORMITIES

Website: www.moflash.com **Email: technical@moflash.co.uk**

INSTALLATION DATA SHEET

LED201/200 Series

Carefully twist lens firmly one turn clockwise to remove from base. Remove 3 x No:4 screws from LED mounting plate that fix plate to internal lugs in the base. Fix base to the required surface, utilising rubber gasket, with 2 x M4 screws (not supplied). Insert power cable through aperture in base & connect to the 4 way terminal on the PCB. 'see picture 1'. Position the base of the LED array over the internal base lugs & fix in place with 3 x No:4 screws.

LED401/400 Series

Connection to this type of unit is either into the three way barrier strip situated in the base of the unit (standard connection) or via the M20 side conduit entry. If M20 is preferred method then two wires in the barrier strip in the base need to be unscrewed and freed from the barrier strip. Un-screw 3 x No:4 screws that retain the base plate & carefully remove, threading the wires through the aperture. Un-screw the same two wires from the internal terminal block. Carefully drill out the M20 entry & using the appropriate cable gland, insert power cable into unit connecting to the internal terminal block. Screw base plate back into position. Fix base to the required surface using the supplied gasket with 3 x M6 Hex set screws (not supplied).

Alarm Stages (Modes of Operation)

These are selected by a two way dip switch on the lens side of the PCB at installation.
The operational mode is factory pre-set to FLASH.

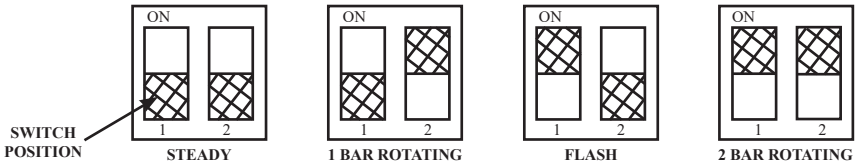

Replace lens onto base ensuring that the base spigot 'O' ring is in place. Twist lens one turn anti-clockwise to lock & check that the 'O' ring is positioned correctly & not caught or snagged.

General Installation Notes

- Installation must be carried out in accordance with the latest codes of practice by a qualified electrician.
- Ensure power is disconnected prior to installation or maintenance to avoid electrical shock.
- Environmental exposure conditions during installation should be dry, not moist or wet.
- The lens of the unit is polycarbonate plastic. Do not clean with petroleum based cleaners.
- To maintain the IP65 weatherproof rating the beacon must be mounted with the lens above the base.
- Avoid mounting the beacon where it will be subject to excessive vibration.

LED201/200 Series

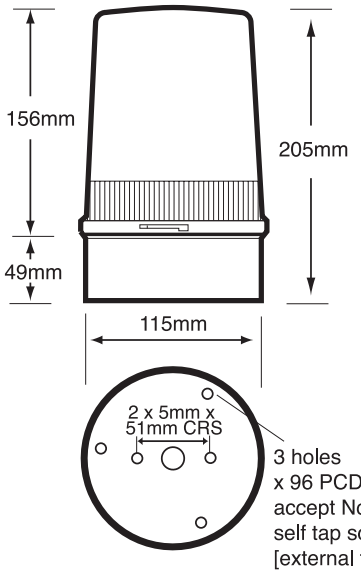

LED401/400 Series

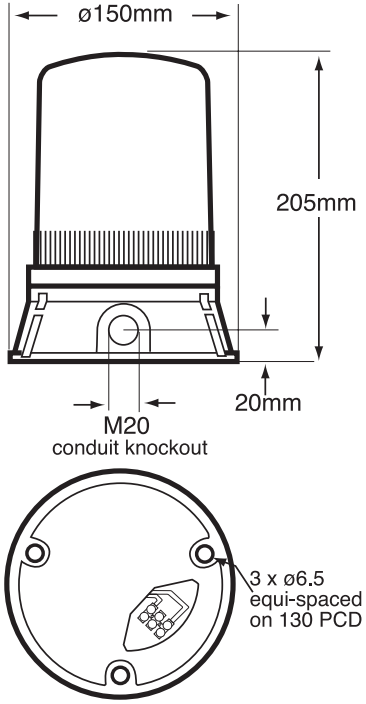

PICTURE 1
Terminal Connections

