128, av. du Maréchal-de-Lattre-de-Tassigny - 87045 LIMOGES Cedex
Tel : 0 (+33) 5 55 06 87 87 Fax : 0 (+33) 5 55 06 88 88
www.legrand.com

Colson™ installation cable ties

Catalogue numbers: 0 319 10/13/16/19/20/21/22/25/50/55/57
0 319 58/59/60/61/71/78/80/81/96
0 308 81/94

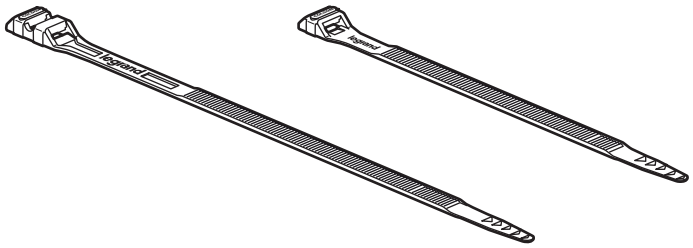

CONTENTS Page

1. General characteristics 1
2. Cable tie range.....1
3. Technical characteristics.....1-2
4. Colson™ tool.....2
5. Accessories 2-4

1. GENERAL CHARACTERISTICS

Colson™ ties are black, UV resistant, have external teeth and are designed to hold cables, strands and tubes in external installations.
Colson™ accessories enable the ties to be used whatever the support (duct, sheeting, post, etc.).
Colson™ cable ties are compliant with standards EN 62275 type1 (NFC 68-146)

2. RANGE

■ 2.1 Dimensions

	0 319 10	0 319 13	0 319 16	0 319 19	0 319 20	0 319 21	0 319 22	0 319 25
Width (mm)	9						6	
Flat length (mm)	123	185	262	357	498	750	119	180

■ 2.2 Usage diameters



	0 319 10	0 319 13	0 319 16	0 319 19	0 319 20	0 319 21	0 319 22	0 319 25
Ø mini (mm)	4	10	26	26	74	74	4	10
Ø maxi (mm)	22	42	62	92	140	220	25	45
Ø max (mm) tightening mechanical area	19	39	56	86	134	214	21	41

3. TECHNICAL CHARACTERISTICS

■ 3.1 Resistance to tearing

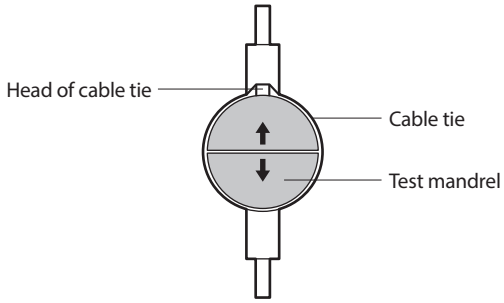

	0 319 10	0 319 13	0 319 16	0 319 19	0 319 20	0 319 21	0 319 22	0 319 25
Mini resistance of the tightening mechanical area (daN)	36	36	53	53	53	53	22	22
Mini resistance of the tightening manual area (daN)	18	18	26,5	26,5	26,5	26,5	11	11

Measures obtained after 28 or 21 days (Cat. Nos 0 319 22/25) at a temperature of 23 °C and a relative humidity of 50 %

■ 3.2 Insertion effort

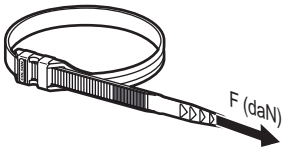

	0 319 10	0 319 13	0 319 16	0 319 19	0 319 20	0 319 21	0 319 22	0 319 25
Maxi effort of the tightening mechanical area (daN)	4	4	5	5	5,5	5,5	4	4
Maxi effort of the tightening manual area (daN)	2	2	2,5	2,5	2,75	2,75	2	2

Measures obtained after 28 or 21 days (Cat. Nos 0 319 22/25) at a temperature of 23 °C and a relative humidity of 50 %

3. TECHNICAL CHARACTERISTICS (CONTINUED)

■ 3.3 Resistance to temperature

- Max. permanent usage temperature (1,000 Hrs according to EN 50 146)..... 85 °C
- Min. permanent usage temperature (tie installed)..... -40 °C
- Min. installation temperature ..... -30 °C

■ 3.4 Fire behaviour

- Resistance to glow wire according to IEC 60 695-2-11..... 650 °C
- Compliant with UL 94 requirements..... HB classification
- Limiting Oxygen Index (LOI) according to EN/ISO 4589-1/ASTM D 2863-00 ..... 19 %
- Duration of flame application according to EN 50 146..... 10 s
- Corrosiveness of smoke according to NFC 20-453..... < 5 %

■ 3.5 Resistance to UV radiation according to standard IEC 62275 type 1

The UV resistant black cable ties for exterior use successfully pass UV resistance tests and climatic ageing tests representing actual conditions of use.
These cycles combine 1000 hours of exposure to radiation under arc or xenon lamps according to ISO 4892-2 method 1.

■ 3.6 Climatic ageing according to XP C20-540

Colson™ cable ties are subjected to weekly cycles that represent actual conditions of use.
These cycles combine UV radiation, humidity, water spraying, heat and cold.
After one month of testing, Colson™ cables ties retain 80% of their resistance to tearing.

■ 3.7 Resistance to chemical products (at ambient temperature of 23°C)

++ : excellent + : moderate - : weak

Mineral acids	Hydrochloric ≤ 10%	++
	Sulphuric ≤ 10%	++
	Nitric, all concentrations	-
Organic acids	Acetic	+
	Tartaric	++
	Uric	++
	Formic	-
Mineral bases	Soda ≤ 10%	++
	Potash ≤ 10%	++
	Ammonia ≤ 10%	++
Organic bases	Aniline (pure)	+
	Pyridine (pure)	-
	Urea	++
	Oils	++
	Greases	++
	Oil products	++
	Sea water	++
	Chlorinated solvents	-
	Phenols	-
	Alcohol	++
	Hydrocarbons	++
	Mineral salts	++

■ 3.8 Material

Halogen free.

4. COLSON TOOL™, CAT. NO 0 319 96

The Colson™ tool is used to tighten and trim surplus strap length close to the tie head, for ties 6 mm and 9 mm wide.

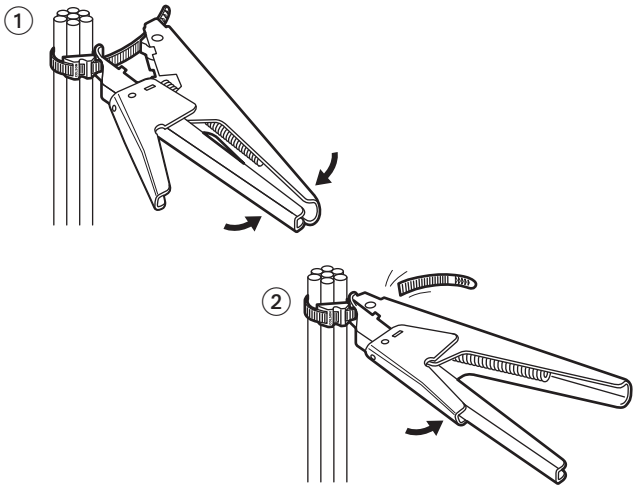

5. ACCESSORIES

■ 5.1 Base for Colson™ ties, Cat. No 0 319 59

For ties 9 mm wide max.
Fastening using:
- "Spit Pulsa 700E" nail gun
- screw Ø 4 mm.

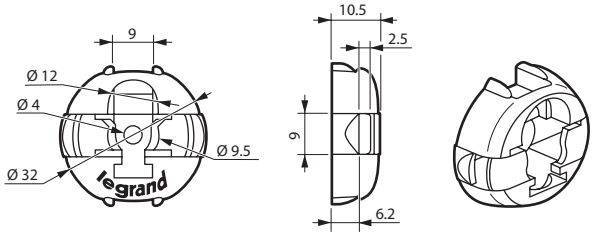

■ 5.2 Standard wall plug base, Cat. No 0 319 55

Drilling: Ø 8 mm (hard materials), Ø 7 mm (softer materials).

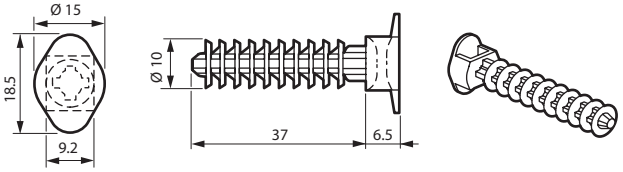

5. ACCESSORIES (CONTINUED)

■ 5.3 Wall spacer plug base, Cat. No 0 319 58

For ties 9 mm wide max.
Drilling: Ø 8 mm (hard materials), Ø 7 mm (softer materials).

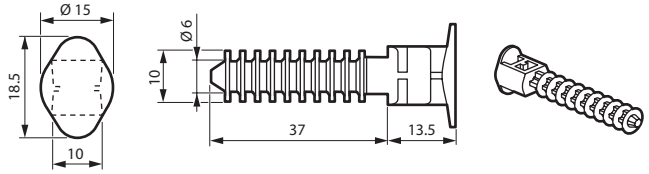

■ 5.4 Screw-on base, Cat. No 0 319 50

For ties 9 mm wide max.
Fastening with:
- screw-in wall plug, Cat. No 0 319 57,
- dowel Ø 7 mm,
- screw Ø 5 mm.

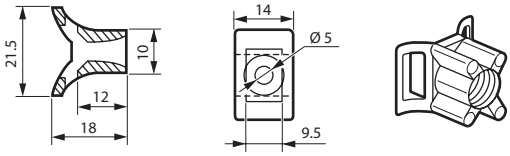

■ 5.5 Screw-in wall plug, Cat. No 0 319 57

Drilling: Ø 8 mm (hard materials), Ø 7 mm (softer materials).
Threaded head Ø 6.6 spacing 150.

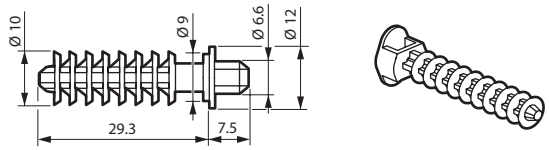

■ 5.6 Stud base, Cat. No 0 319 60

For ties 9 mm wide max.

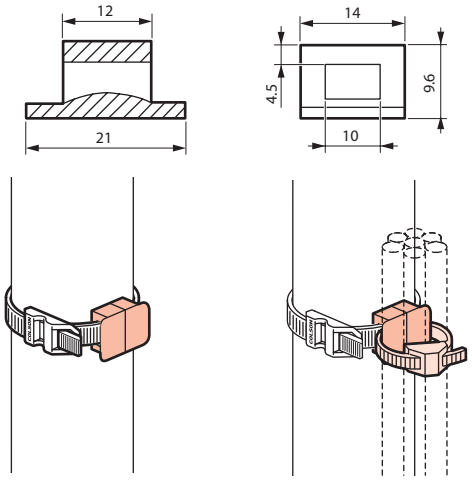

5. ACCESSORIES (CONTINUED)

■ 5.7 Post base, Cat. No 0 319 61

For steel straps 18 mm wide max.

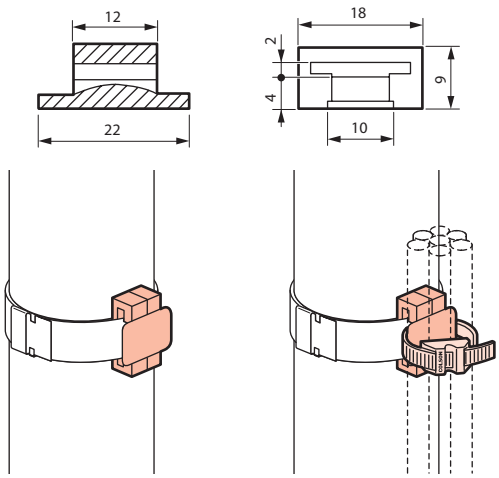

■ 5.8 Sheet metal bolt, Cat. No 0 319 78

For ties 9 mm wide max.
For sheet metal 0.5 to 1 mm thick.
Ø drill hole: 7 mm.

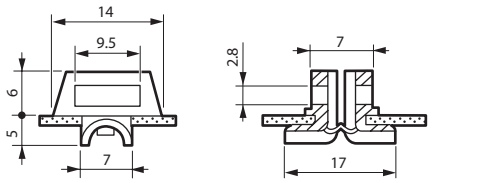

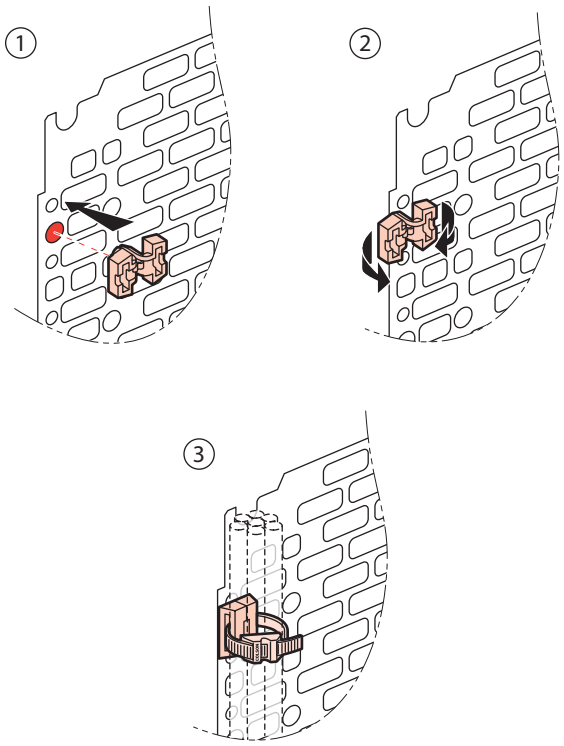

5. ACCESSORIES (CONTINUED)

■ 5.9 Lock for cable trays, Cat. No 0 319 71

For ties 9 mm wide max.
Tray with transverse or longitudinal perforation, max 1.5 mm thick.

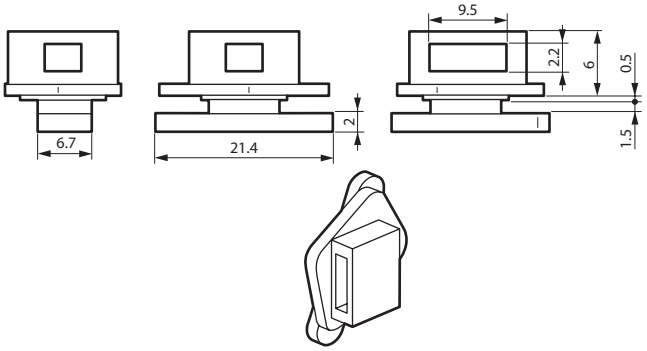

■ 5.10 Base for aluminium DLP trunking, Cat. No 0 308 94

For ties 9 mm wide max.

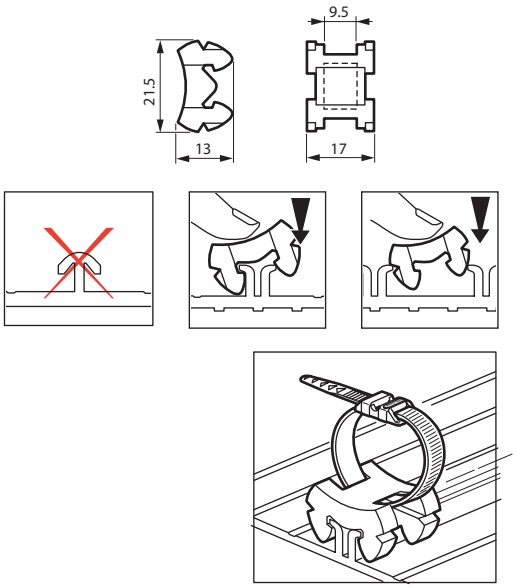

5. ACCESSORIES (CONTINUED)

■ 5.11 Base for DLP trunking, 80 to 220, Cat. No 0 308 91

For ties 9 mm wide max.

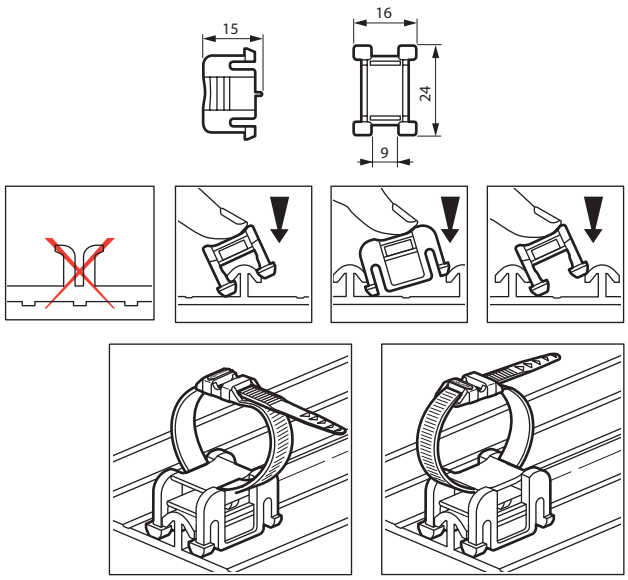

■ 5.12 Signage plates, Cat. No 0 319 80, 81

Marking by cold punch.

Cat. No 0 319 80 for 9 mm wide tie.

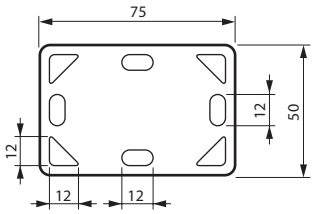

Cat. No 0 319 81 for 6 mm wide tie.

