Inductive sensor

BES M30MI1-PSC22B-S04G
BES02YM

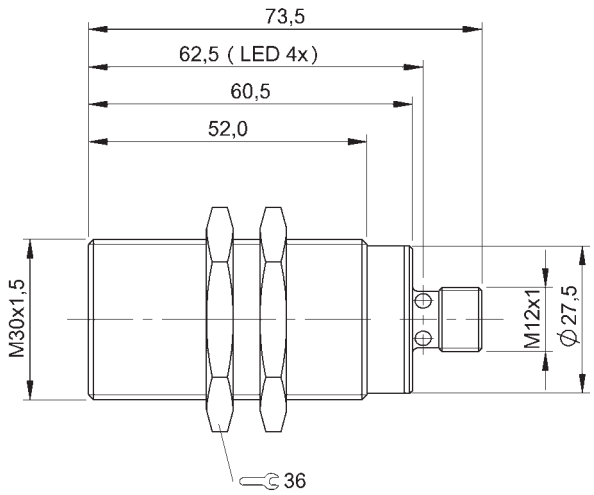

- **PNP**
- **Normally open (NO)**
- **22.00 mm**
- **Quasi embeddable**
- **Connector, M12x1-S04**

IND. CONT. EQ. 11RZ for use in the secondary of a class 2 source of supply

General attributes

Approvals / Conformity	cULus CE EAC
Basic standard	IEC 60947-5-2
Enclosure Type per IEC 60529	IP67
Function indicator	Yes
Operating distance marking	■■■
Polarity reversal protected	Yes
Power indicator	No
Short circuit protected	Yes
Trademark	TripleProx
MTTF (40°C)	390 a

Electrical attributes

Connection type	Connector
Eff. operating current Ie	200 mA
Eff. operating voltage Ue DC	24.0 V
Electrical version	DC, direct current
Load capacitance max. (at Ue)	1.000 µF
Max. no-load cur. Io undamped	10.0 mA
Minimum operating current Im	0 mA
No-load current Io damped max.	10.0 mA
Operating voltage UB max. DC [V]	30.0 V
Operating voltage UB min. DC [V]	10.0 V
Rated insulation voltage Ui	75 VDC
Rated short circuit current	100 A
Ripple max. (% of Ue)	20 %
Switching freq. f max. (at Ue)	200 Hz
Switching function	Normally open (NO)
Switching output	PNP
Voltage drop static max.	2.0 V

Mechanical attributes

Ambient temperature Ta max.	70 °C
Ambient temperature Ta min.	-25 °C
Assured operating distance Sa	17.60 mm
Connector type	M12x1-S04
Depth	73.5 mm
Diameter d1	M30x1.5
Eff. operating distance Sr	22.00 mm
Housing material	CuZn
Mech. installation condition	Quasi embeddable
Mounting length	52.0 mm
Rated operating distance Sn [mm]	22.00 mm
Sensing face material	PBT
Surface protection	Chrome-plated
Tightening torque	70 Nm

Remarks

The sensor is functional again after the overload has been eliminated.
Quasi-shielded: See installation instructions for inductive sensors with extended switching distance 825356.

For further information on MTTF/B10d, please refer to the MTTF / B10d Certificate.

Specification of the MTTF value and the B10d value do not represent any binding quality and/or life expectancy guarantees.

