Float Switch



LFL2-**-U

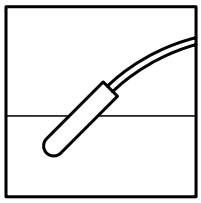

Features

- Switch element: Micro switch, **mercury-free**
- Limit value detection for fluids
- Sleeve design: small diameter, mounting through G1 tap hole possible
- Ball design: high buoyancy

Dimensions

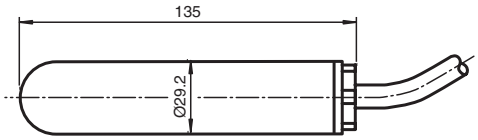

Sleeve design LFL2-CK-U

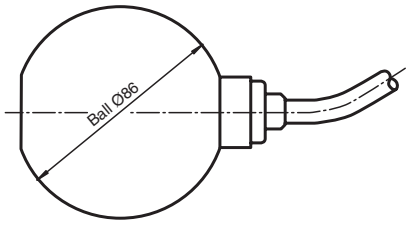

Ball design LFL2-BK-U

Function

The microswitch (change-over contact) is integrated in a PP float and is activated in the event of deviations from the horizontal position. The switching ball in the float, which moves along an axis, activates the microswitch.

Electrical connection

Cable colours		when potential-free
black-brown	=	contact open
black-blue	=	contact closed

Release date 2011-08-11 12:03 Date of issue 2011-08-12 t3018_eng.xml

Subject to reasonable modifications due to technical advances.
Copyright Pepperl+Fuchs, Printed in Germany

Application	
Description	microswitch with switching ball, change-over contact
Function and system design	
Equipment architecture	This device may be used with any sequential circuit, as long as the circuit can support the electrical circuit values of the switching elements.
Auxiliary energy	
Supply voltage	max. 250 V AC, 150 V DC
Current consumption	max. 3 (1) A
Operating conditions	
Installation conditions	
Installation instructions	range of application and minimum length between mounting and float: - PVC version: ≥ 50 mm (2 in), preferred for water - PUR version: ≥ 100 mm (4 in), preferred for fuels, heating oils, oily fluids - CSM/CM version: ≥ 100 mm (4 in), preferred for many acids and lyes mounting: - The float switch is mounted either from sidewards through a cable gland ≥ G1A into the vessel or - by means of a counter weight or rods (e. g. float switch assembly) from the top. - The pivot of the cable should always be horizontal.
Process conditions	
Process temperature	PVC version: 5 ... 70 °C (278 ... 343 K) PUR version: 5 ... 70 °C (278 ... 343 K) CSM/CM version: -20 ... 90 °C (253 ... 363 K)
Process pressure (static pressure)	sleeve design: ≤ 3 bar at 20 °C (68 °F) ball design: ≤ 2 bar at 20 °C (68 °F)
Density	sleeve design: ≥ 0.8 g/cm^3 ball design: ≥ 0.6 g/cm^3
Mechanical specifications	
Protection degree	IP68
Mechanical construction	
Versions	sleeve design: LFL2-CK-U-PVC3, LFL2-CK-U-PUR3, LFL2-CK-U-CSM3 ball design: LFL2-BK-U-PVC3, LFL2-BK-U-PUR3, LFL2-BK-U-CSM3
Material	float: PP (Polypropylene) cable: - PVC version: PVC cable, highly flexible (3 x 0.75 mm^2) - PUR version: PUR cable, highly flexible (3 x 0.50 mm^2) - CSM/CM version: CSM/CM cable (chlorinated polyethylene, (3 x 0.75 mm^2))
Switching point	switch angle: upper switching point +25° (±10°), lower switching point -14° (±16°), measured against the horizontal
General information	
Directive conformity	
Directive 73/23/EEC (Low Voltage Directive)	EN 50178
Directive 89/336/EEC (EMC)	EN 60947-5-2, EN 60947-5-2 A1
Conformity	
Protection degree	EN 60529
Supplementary information	Statement of Conformity, Declaration of Conformity, Attestation of Conformity and instructions have to be observed where applicable. For information see www.pepperl-fuchs.com.

Release date 2011-08-11 12:03 Date of issue 2011-08-12 t3018_eng.xml

Subject to reasonable modifications due to technical advances. Copyright Pepperl+Fuchs, Printed in Germany

Accessories

- LFL-Z231, counter nut, G1A, PVC
- LFL-Z32, counter weight, grey cast iron with plastic coating (Polycarbonate)
- LFL-Z33, counter weight, grey cast iron with ECTFE coating (Halar)



- LFL-Z131, cable gland G1A, PVC
- LFL-Z132, cable gland G1A, brass
- LFL-Z161, cable gland G2A, PVC
- LFL-Z431, cable gland 1 NPT, PVC
- LFL-Z432, cable gland 1 NPT, brass
- LFL-Z461, cable gland 2 NPT, PVC

Type code/model number

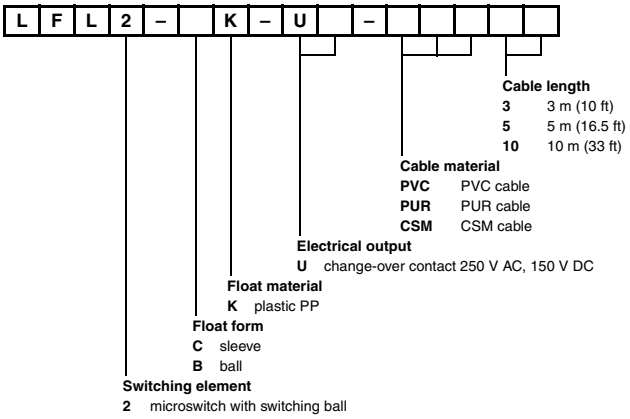

Release date 2011-08-11 12:03 Date of issue 2011-08-12 t3018_eng.xml

Subject to reasonable modifications due to technical advances.
Copyright Pepperl+Fuchs, Printed in Germany