Part Number: **BU-11APN**
Description: **Heavy duty grounding Clip**

4106

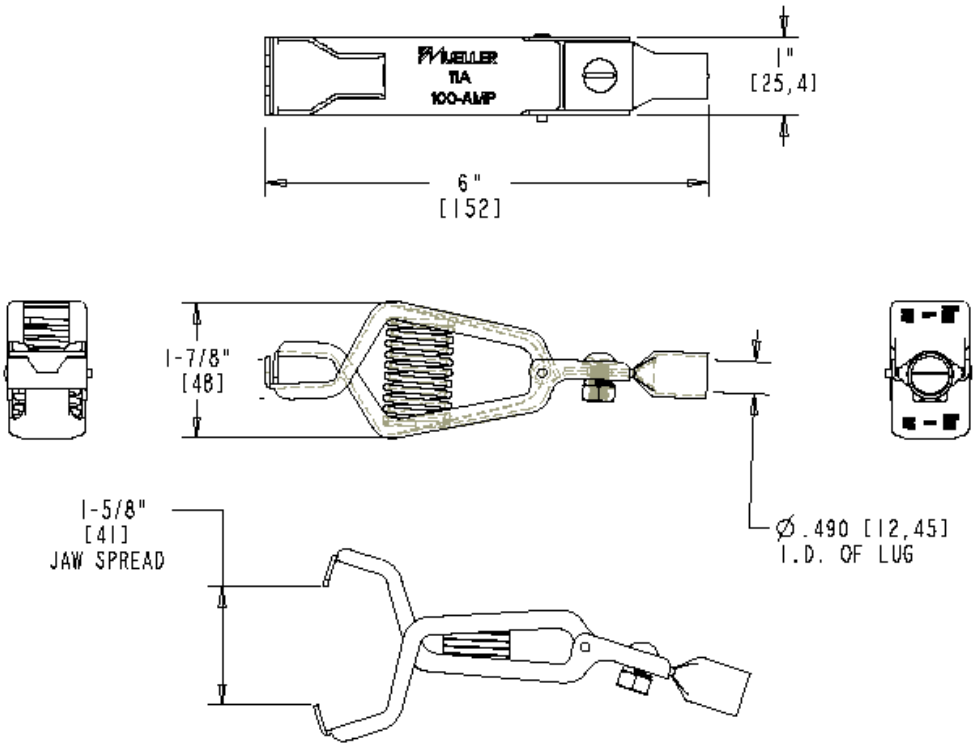

- Heavy duty grounding clip
- Can be used with up to 0 AWG wire or welding cable
- Material: zinc-plated steel
- Also see BU-APS, for a Positive “+” marked clip and BU-CPN & BU-CPS for higher current carrying copper versions
- Use with Mueller Brand BU-13-* PVC Insulators
- Rating: 100 Amps
- Packaged in Bulk
- RoHS Compliant

Mueller Electric Company
1625 E. 31st Street
Cleveland, Ohio 44114

ISO 9001:2000
Over 95 Years Of Innovation
www.muellerelectric.com

TEL. 800-955-2629
TEL. 216-771-5225
FAX. 216-771-3068