Max. 9 m³/h

DC axial fans

☐ 40 x 10 mm



- **Material:** Housing: GRP[1] (PBT)
  Impeller: GRP[1] (PA)
- **Direction of air flow:** Exhaust over struts
- **Direction of rotation:** Counterclockwise, looking towards rotor
- **Connection:** Via single wires AWG 28, TR 64
- **Highlights:** Some models are suitable for use at high ambient temperatures
- **Weight:** 17 g

- **Possible special versions:**
  (See chapter DC fans - specials)
  - Speed signal
  - Go / NoGo alarm
  - Moisture protection

1) Fiberglass-reinforced plastic

Series 400 F **Nominal data**	Air flow	Air flow	**Nominal voltage**	Voltage range	Sound pressure level	Sound power level	Sintec sleeve bearings Ball bearings	Power consumption	Nominal speed	Temperature range	Service life L_{10} (20 °C) ebm-papst standard Service life L_{10} (60 °C) ebm-papst standard	Life expectancy L_{10IPC} (40 °C) see page 17	Curve
Type	**m³/h**	**cfm**	**VDC**	**VDC**	**dB(A)**	**Bel(A)**	□ / ■	**Watts**	**rpm⁻¹**	**°C**	**Hours**	**Hours**	
405 F	8	4.7	**5**	4.5...5.5	22.1	4.4	■	0.7	5 400	-20...+70	45 000 / 17 500	47 500	②
405 FH	9	5.3	**5**	4.5...5.5	26.0	4.6	■	0.9	6 000	-20...+70	45 000 / 17 500	47 500	③
412 FM	6	3.5	**12**	10...14	17.0	3.8	■	0.5	4 300	-20...+70	45 000 / 17 500	47 500	①
412 F	8	4.7	**12**	10...14	22.1	4.4	■	0.7	5 400	-20...+70	45 000 / 17 500	47 500	②
412 FH	9	5.3	**12**	10...14	26.0	4.6	■	0.8	6 000	-20...+70	45 000 / 17 500	47 500	③
414 F	8	4.7	**24**	20...28	22.1	4.4	■	0.8	5 400	-20...+70	45 000 / 17 500	47 500	②
414 FH	9	5.3	**24**	21.6...26.4	26.0	4.4	■	0.9	6 000	-20...+70	45 000 / 17 500	47 500	③
Model with temperature range up to +85 °C.													
412 FM-074	6	3.5	**12**	10...14	17.0	3.8	■	0.4	4 300	-20...+85	45 000 / 17 500	47 500	①
412 F-130	8	4.7	**12**	10...14	22.1	4.4	■	0.6	5 400	-20...+85	45 000 / 17 500	47 500	②
412 FH-132	9	5.3	**12**	10...14	26.0	4.6	■	0.8	6 000	-20...+85	45 000 / 17 500	47 500	③

Subject to change

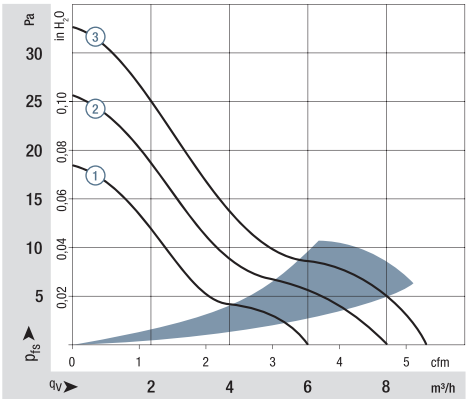

Air performance measured according to: ISO 5801.
Installation category A, without contact protection.
Noise: Total sound power level L_{WA} ISO 103002 measured on a hemisphere with a radius of 2 m.
Sound pressure level L_{pA} measured at 1 m distance from fan axis.
The values given are applicable only under the specified measuring conditions and may differ depending on the installation conditions.
In the event of deviation from the standard configuration, the parameters must be checked after installation!
For detailed information see
http://www.ebmpapst.com/general conditions

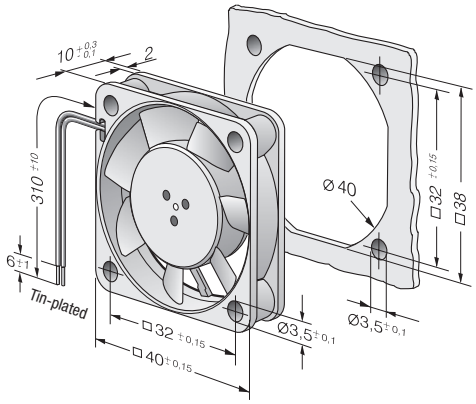

ebmpapst