TI01524P/00/EN/01.20
71505305
2020-08-03

Technical Information
Waterpilot FMX11

Hydrostatic level measurement



Compact transmitter for level measurement

Application

The Waterpilot FMX11 is a pressure sensor for hydrostatic level measurement in fresh water applications. Typical applications include:
- Level measurement in groundwater wells; suitable for narrow 1" pipes
- Surface water monitoring in rivers and lakes
- Level monitoring in the extraction of drinking water, e.g., in water towers

Your benefits

- Easy and quick to install and commission
- Flexible uses in fresh water applications thanks to the very compact design and materials that are suitable for drinking water

Endress+Hauser
People for Process Automation

Table of contents

About this document 3
Document function 3
Symbols 3
List of abbreviations 4

Function and system design 5
Measuring principle 5
Measuring system 5

Input 6
Measured variable 6
Measuring range 6
Input signal 6

Output 7
Output signal 7
Signal range 7
Maximum load 7

Power supply 8
Supply voltage 8
Power consumption 8
Current consumption 8
Electrical connection 8
Terminals in the terminal box 8
Cable specification 8
Residual ripple 9
Overvoltage protection 9

Performance characteristics 10
Reference operating conditions 10
Reference accuracy 10
Long-term stability 10
Influence of medium temperature 10
Warm-up period 10
Response time 10

Installation 10
Installation instructions 10

Environment 13
Ambient temperature range 13
Storage temperature range 13
Degree of protection 13
Electromagnetic compatibility (EMC) 13

Process 14
Medium temperature range 14
Medium temperature limit 14
Process pressure range 14

Mechanical construction 15
Dimensions 15
Weight 16
Materials 16

Human interface 17

Certificates and approvals 18
CE mark 18
$_{C}UL_{US}$ listing 18
Drinking water approval 18
Pressure Equipment Directive 18
Additional certification 18
Other standards and guidelines 18

Ordering information 20
Scope of delivery 20

Accessories 21
Device-specific accessories 21

Supplementary documentation 21

About this document

Document function

The document contains all the technical data on the device and provides an overview of the accessories and other products that can be ordered for the device

Symbols

Safety symbols

DANGER

This symbol alerts you to a dangerous situation. Failure to avoid this situation will result in serious or fatal injury.

WARNING

This symbol alerts you to a dangerous situation. Failure to avoid this situation can result in serious or fatal injury.

CAUTION

This symbol alerts you to a dangerous situation. Failure to avoid this situation can result in minor or medium injury.

NOTICE

This symbol contains information on procedures and other facts which do not result in personal injury.

Electrical symbols

Ground connection: ⏚

A grounded terminal which, as far as the operator is concerned, is grounded via a grounding system.

Symbols for certain types of information

Permitted: ✓

Procedures, processes or actions that are permitted.

Forbidden: ✗

Procedures, processes or actions that are forbidden.

Additional information: ℹ

Series of steps: 1., 2., 3.

Result of an individual step: ↳

Symbols in graphics

Item numbers: 1, 2, 3 ...

Series of steps: 1., 2., 3.

Views: A, B, C, ...

List of abbreviations

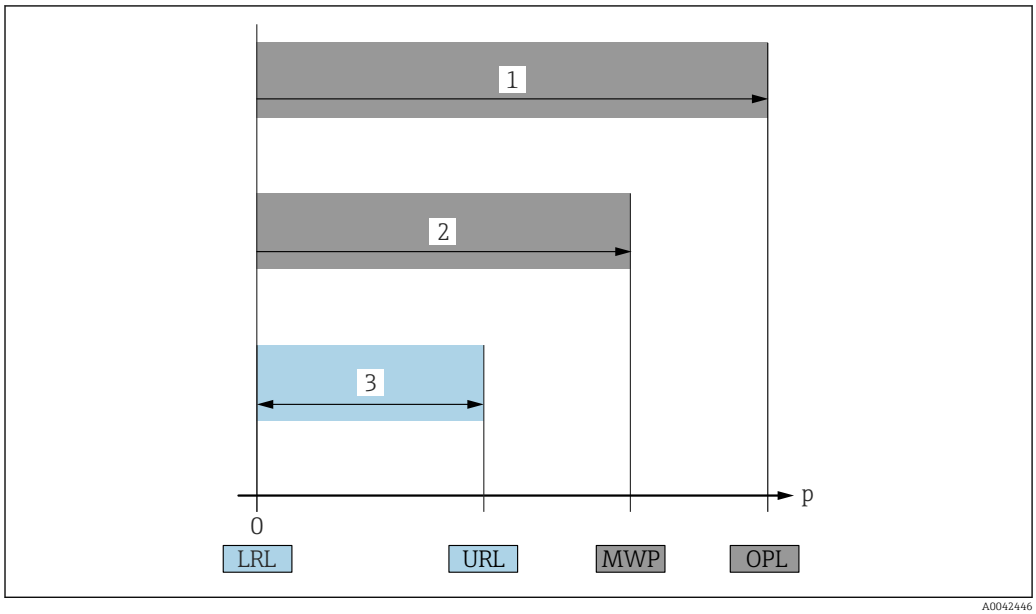

Item	Term/abbreviation	Explanation
1	OPL	The OPL (over pressure limit = sensor overload limit) for the measuring device depends on the lowest-rated element, with regard to pressure, of the selected components, i.e. the process connection has to be taken into consideration in addition to the measuring cell. Also observe pressure-temperature dependency. The OPL may only be applied for a limited period of time.
2	MWP	The MWP (maximum working pressure) for the sensors depends on the lowest-rated element, with regard to pressure, of the selected components, i.e. the process connection has to be taken into consideration in addition to the measuring cell. Also observe pressure-temperature dependency. The MWP may be applied at the device for an unlimited period.
3	Maximum sensor measuring range/ calibrated span	Span between LRL and URL This sensor measuring range is equivalent to the maximum calibratable/adjustable span.
p	-	Pressure
-	LRL	Lower range limit
-	URL	Upper range limit

Function and system design

Measuring principle

The process pressure causes the metal process isolating diaphragm of the sensor to deflect. A filling oil transfers the pressure to a Wheatstone bridge (semiconductor technology). The pressure-dependent change in the bridge output voltage is measured and evaluated.

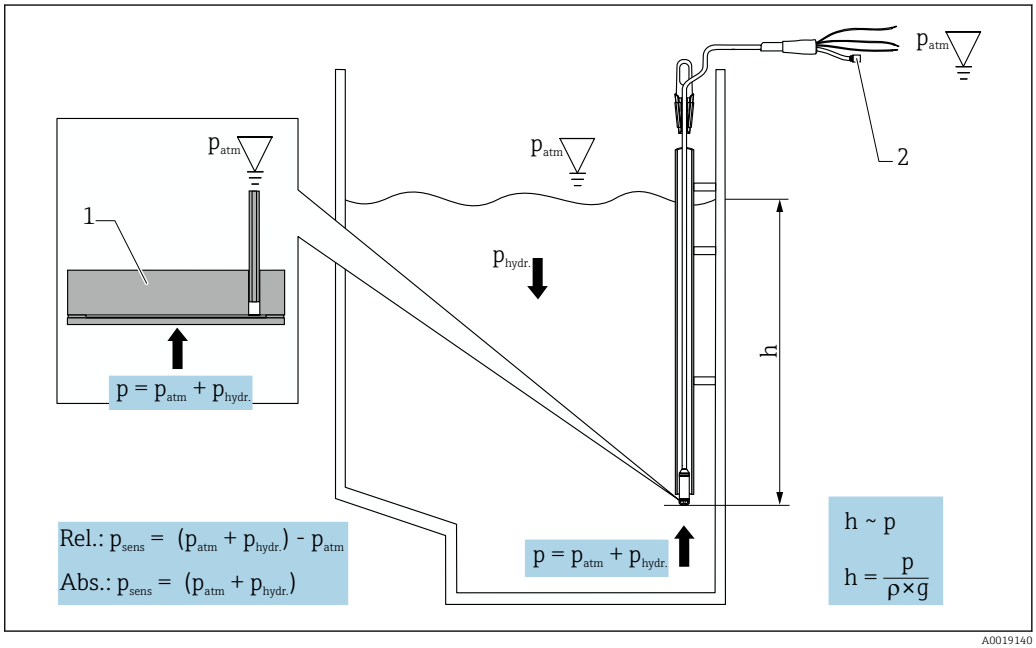

A0019140

1 Metal measuring cell
2 Pressure compensation tube
h Level height
p Total pressure = atmospheric pressure + hydrostatic pressure
ρ Density of the medium
g Gravitational acceleration
$P_{hydr.}$ Hydrostatic pressure
P_{atm} Atmospheric pressure
P_{sens} Pressure displayed on the sensor

Measuring system

Application examples

The complete measuring system comprises a Waterpilot FMX11 and a transmitter power supply unit with a supply voltage of 8 to 28 V_{DC} as standard.

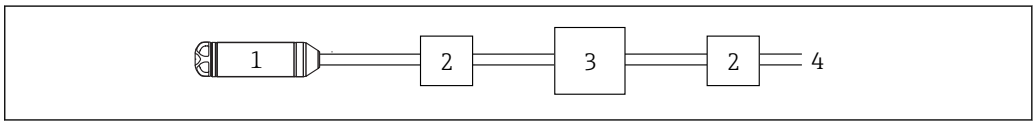

A0040871

1 Waterpilot FMX11
2 Overvoltage protection (OVP), e.g., HAW from Endress+Hauser
3 Power supply, display and evaluation unit with one input for 4 to 20 mA
4 Power supply

Input

Measured variable

Hydrostatic pressure of a liquid

Measuring range

Customer-specific measuring ranges or calibration that has been preset in the factory.

Input variable absolute pressure					
Relative nominal pressure [bar (abs.)]	0.2 (3)	0.4 (6)	0.6 (9)	1.0 (14.5)	2.0 (29)
Level [mH_2O]	2	4	6	10	20
Overload OPL [bar (abs.)]	1 (14.5)	2 (29)	5 (72.5)	5 (72.5)	10 (145)
Burst pressure ≥ [bar (abs.)]	1.5 (22)	3 (43.5)	7.5 (109)	7.5 (109)	10 (145)
Negative pressure [bar (abs.)]	−0.7 (−11)	−1 (−14.5) (unrestricted vacuum-resistance)			

Input signal

Change in capacitance

Output

Output signal

4 to 20 mA analog, 2-wire for hydrostatic pressure measured value.

Signal range

2 to 22 mA

Maximum load

The maximum load resistance depends on the supply voltage (U) and must be determined individually for each current loop, see formula and diagram. The total resistance resulting from the resistances of the connected devices, the connecting cable and, where applicable, the resistance of the extension cable may not exceed the load resistance value. Load diagram for an approximate calculation of the load resistance. Additional resistances, such as the resistance of the extension cable (per wire ≤0.09 Ω/m), have to be subtracted from the value calculated as shown in the equation.

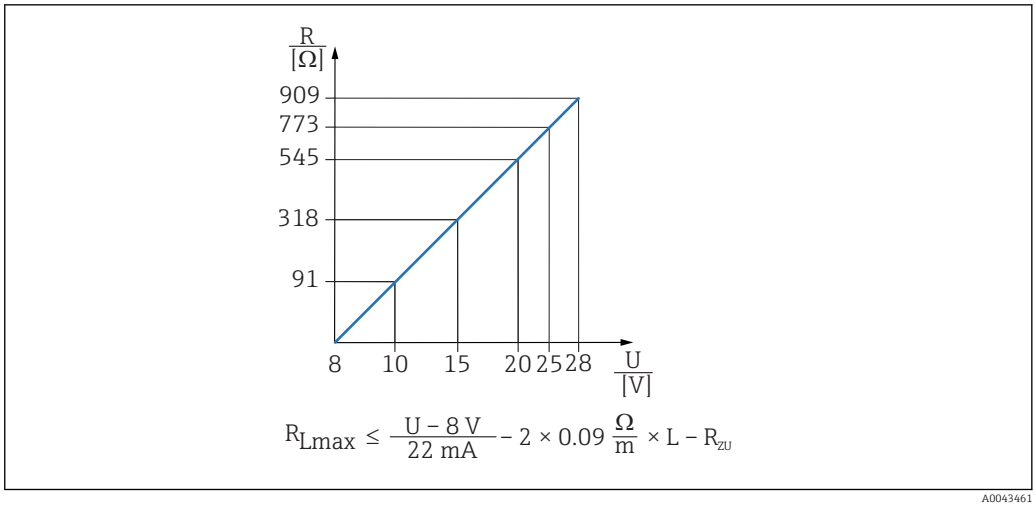

A0043461

R_{Lmax} *Max. load resistance [Ω]*
R_{add} *Additional resistances such as resistance of evaluating device and/or display unit, cable resistance [Ω]*
U Supply voltage [V]
L Basic length, extension cable [m]

Power supply

Supply voltage

8 to 28 V_{DC}

Power consumption

≤ 0.62 W at 28 V_{DC}

Current consumption

Max. current consumption: ≤ 22 mA
Min. current consumption: ≥ 2 mA

Electrical connection

- The supply voltage must match the supply voltage specified on the nameplate.
- The cable must end in a dry room or a suitable terminal box. The terminal box (IP66/IP67) with GORE-TEX® filter from Endress+Hauser is suitable for outdoor installation. The terminal box can be ordered separately as an accessory (order number: 52006152).
- Connect the device in accordance with the following diagrams. Reverse polarity protection is integrated in the Waterpilot FMX11. Changing the polarities will not result in damage to the device. The device is not operational.
- A suitable circuit breaker should be provided for the device in accordance with IEC/EN 61010.

The electrical connection is established with the corresponding wires of the extension cable and with the optional use of the terminal box and a power supply (e.g. RN221N active barrier).

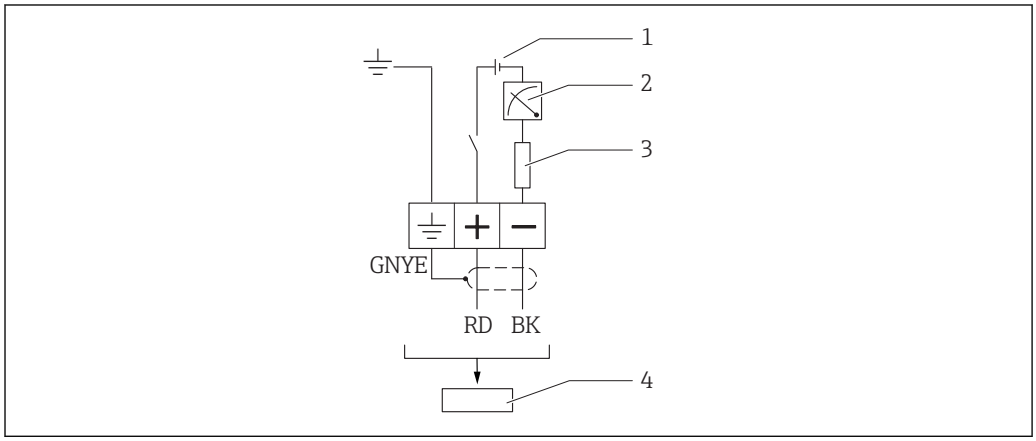

A0040869

1 8 to 28 V_{DC}
2 4 to 20 mA
3 Resistance (R_L)
4 Waterpilot FMX11

Wire colors

- RD = red
- BK = black
- GNYE = green/yellow

Connection values

Connection classification as per IEC 61010-1:
- Overvoltage category 1
- Pollution level 1

Terminals in the terminal box

Three terminals as standard in terminal box (terminal box can be ordered separately as an option, order number: 52006152).

Cable specification

Connecting cable

Endress+Hauser recommends using shielded, twisted-pair two-wire cables.

- Commercially available instrument cable
- Terminals, terminal box: 0.08 to 2.5 mm^2 (28 to 14 AWG)

Extension cable

- Total outer diameter: 6 mm (0.24 in) ±0.2 mm (0.01 in)
- PA pressure compensation tube:
  - Outer diameter 2.5 mm (0.1 in)
  - Internal diameter 1.5 mm (0.06 in)
  - Pressure compensation element outer diameter 6 mm (0.24 in)

The extension cables are shielded.

Cross-section

2 x 0.22 mm^2 + pressure compensation tube

Cable resistance

Per wire: ≤0.09 Ω/m

Residual ripple

No impact on the 4 to 20 mA signal to ±5 % residual ripple within the permitted voltage range.

Overvoltage protection

To protect the Waterpilot from large interference voltage peaks, Endress+Hauser recommends installing overvoltage protection upstream and downstream of the display and/or evaluation unit.

- Integrated overvoltage protection to EN 61000-4-5 (2 kV asymmetrical)
- Install overvoltage protection ≥ 1.0 kV, external if necessary

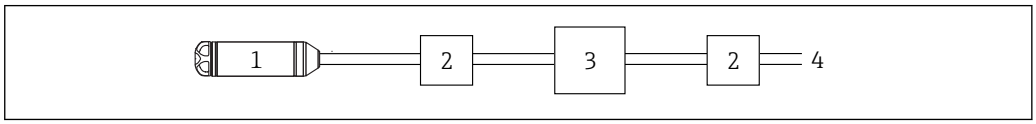

A0040871

1 Waterpilot FMX11
2 Overvoltage protection (OVP), e.g., HAW from Endress+Hauser
3 Power supply, display and evaluation unit with one input for 4 to 20 mA
4 Power supply

Performance characteristics

Reference operating conditions

- As per IEC 60770
- Ambient temperature T_U = constant, in the range: +21 to +27 °C (+70 to +81 °F)
- Humidity φ = constant, in the range of 20 to 80 % rH
- Ambient pressure p_U = constant, in the range: 860 to 1060 mbar (12.47 to 15.37 psi)
- Position of measuring cell constant, vertical in the range of ±1°
- Supply voltage constant: 21 V DC to 27 V DC

Reference accuracy

The reference accuracy comprises the non-linearity after limit point configuration, hysteresis and non-reproducibility in accordance IEC 60770.

- Sensor measuring range ≥ 400 mbar: ≤ ±0.35 %
- Sensor measuring range < 400 mbar: ≤ ±0.50 %

Long-term stability

≤ ±0.1 % of URL/year at reference operating conditions

Influence of medium temperature

- Thermal change in the zero output and the output span:
  −10 to +70 °C (+14 to 158 °F): < (0.4 + 0.4 x TD)% of set span
- Temperature coefficient (T_K) of the zero output and the output span
  0 to +70 °C (32 to 158 °F): 0.15 %/10 K of URL

Warm-up period

≤ 10 s

Response time

- T90 time: ≤ 15 ms
- T99 time: ≤ 45 ms

Installation

Installation instructions

- Cable length
  - See → 📄 11
  - Limited cable length when performing installation with freely suspended device with suspension clamp: max. 300 m (984 ft).
- Sideways movement of the level probe can result in measuring errors. Install the probe at a point free from flow and turbulence or use a guiding tube. The internal diameter of the guiding tube should be at least 1 mm (0.04 in) greater than the outer diameter of the FMX11.
- To avoid mechanical damage to the measuring cell, the device is equipped with a protection cap.
- The cable must end in a dry room or a suitable terminal box. The terminal box from Endress +Hauser provides humidity and climatic protection and is suitable for installation outdoors.
- Cable length tolerance: ±< 50 mm (1.97 in)
- Endress+Hauser recommends using twisted, shielded cable.
- The length of the extension cable depends on the intended level zero point. The height of the protective cap must be taken into consideration when designing the layout of the measuring point. The level zero point (E) corresponds to the position of the process isolating diaphragm. Level zero point = E; tip of probe = L (see the following diagram).

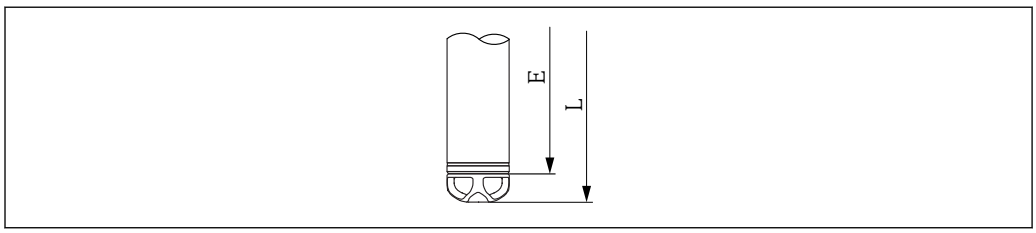

A0043690

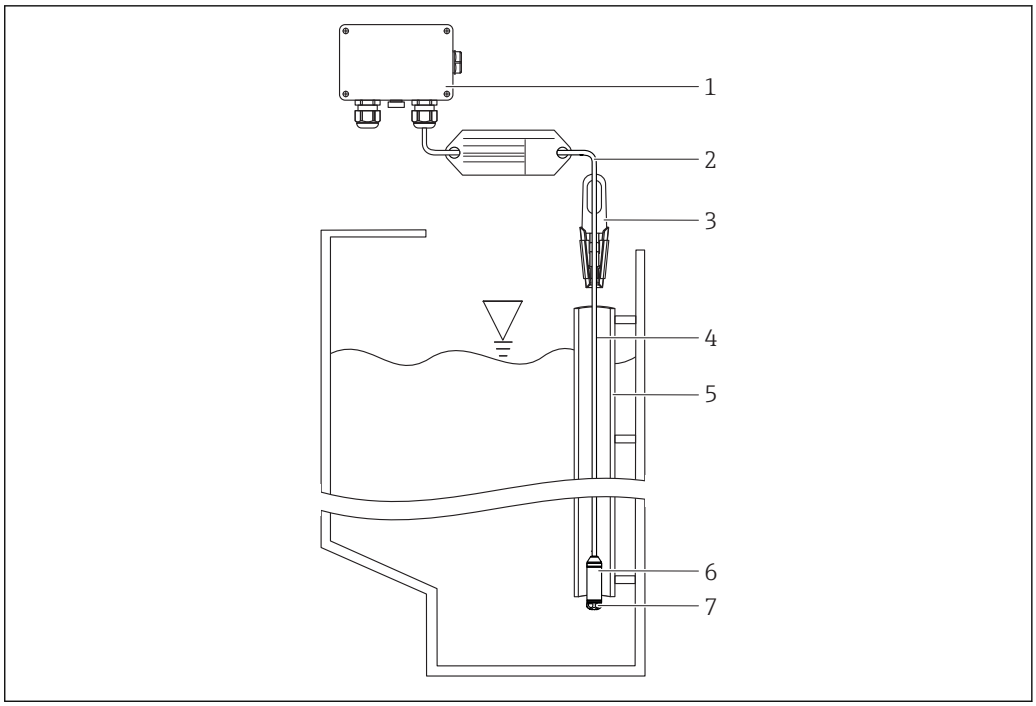

A0040853

1 *Terminal box can be ordered separately*
2 *Bending radius of extension cable*
3 *Suspension clamp can be ordered as an accessory*
4 *Extension cable, cable length*
5 *Guiding tube*
6 *Waterpilot FMX11*
7 *Protection cap*

Mounting the Waterpilot with a mounting clamp

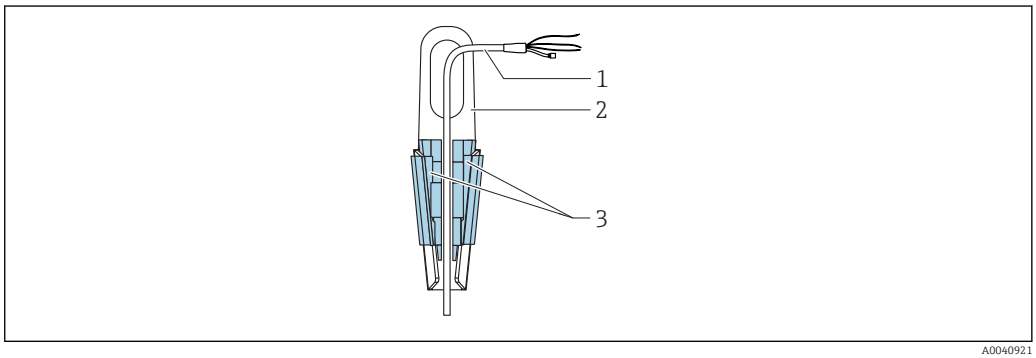

A0040921

1 *Extension cable*
2 *Suspension clamp*
3 *Clamping jaws*

Cable length

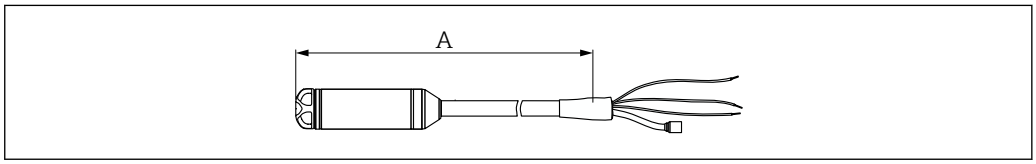

A0043689

A *Length of extension cable*

Pay attention to the "Load"

Cable lengths available for order
- 6 m (20 ft) cable, can be shortened, PE
- 10 m (33 ft) cable, can be shortened, PE
- 20 m (66 ft) cable, can be shortened, PE
- 30 m (98 ft) cable, can be shortened, PE
- Limited cable length when performing installation with freely suspended device with suspension clamp: max. 300 m (984 ft).

Technical data for cable

- Minimum bending radius:
  ≥ 70 mm (2.76 in) (static)
- Tensile strength: 500 N (112.4 lbf)
- Cable extraction force (= tensile force required to extract the cable from the probe):
  ≥ 400 N (89.92 lbf)
- UV-resistant (UV = ultraviolet)
- TPE: Use in water and drinking water

Environment

Ambient temperature range

FMX11

−10 to +70 °C (+14 to +158 °F) (= medium temperature)

Terminal box

−40 to +80 °C (−40 to +176 °F)

Storage temperature range

FMX11

−10 to +70 °C (+14 to +158 °F)

Terminal box

−40 to +80 °C (−40 to +176 °F)

Degree of protection

FMX11

IP68, permanently hermetically sealed at 10 bar (145 psi)

Terminal box (optional)

IP66, IP67

Electromagnetic compatibility (EMC)

- EMC in accordance with all relevant requirements of EN 61326 series. For details, refer to the Declaration of Conformity.
- Maximum deviation: < 0.5 % of span.

Process

Medium temperature range

0 to +70 °C (+32 to +158 °F)

Medium temperature limit

−10 to +70 °C (+14 to +158 °F)

The FMX11 may be operated in this temperature range. The specification values, such as accuracy, may be exceeded.

Process pressure range

WARNING

The maximum pressure for the measuring device depends on the lowest-rated element with regard to pressure.

- The measuring device must be operated only within the specified limits!
- The Pressure Equipment Directive (2014/68/EU) uses the abbreviation "PS". The abbreviation "PS" corresponds to the MWP (maximum working pressure) of the measuring device.
- OPL (Over Pressure Limit = sensor overload limit): The test pressure corresponds to the over pressure limit of the sensor and may only be applied for a limited time period so that no permanent damage develops.

Mechanical construction

Dimensions

Level probe

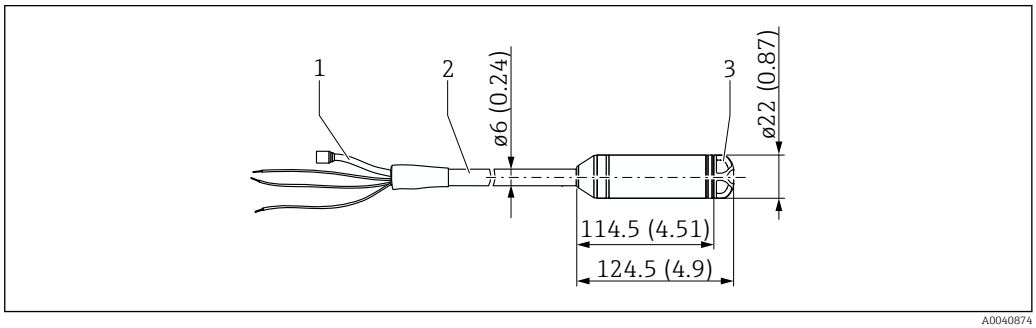

Unit of measurement mm (in)

1 Pressure compensation tube
2 Extension cable
3 Protection cap

Suspension clamp

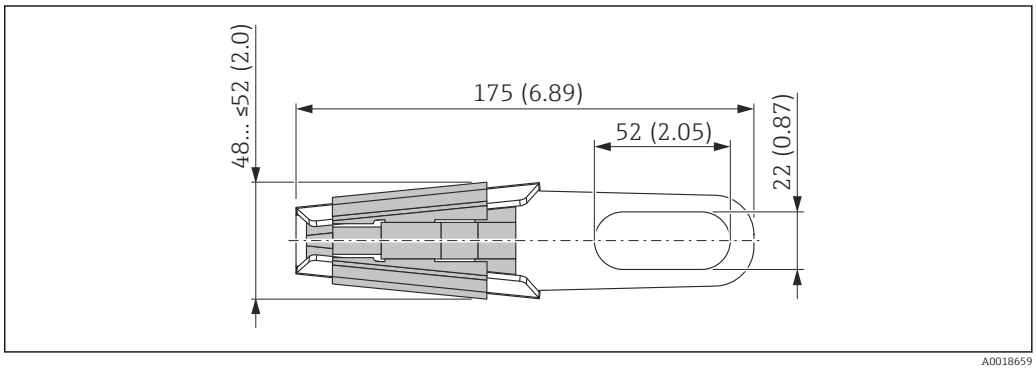

Unit of measurement mm (in)

Terminal box IP66, IP67 with filter

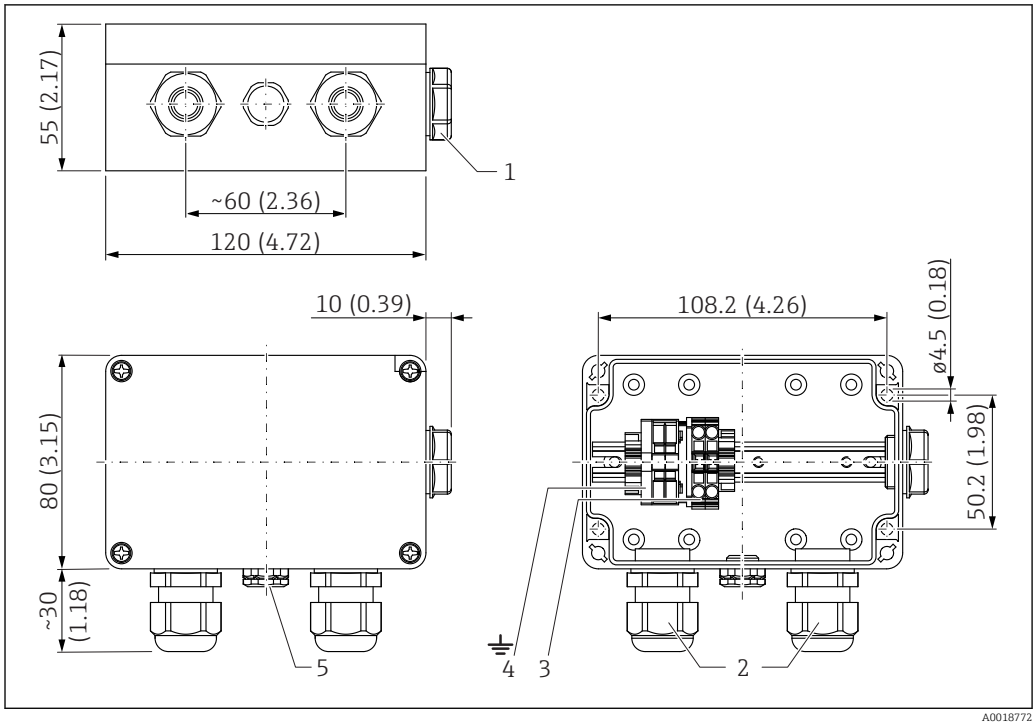

Unit of measurement mm (in)

1 *Dummy plug M20x1.5*
2 *Cable gland M20x1.5*
3 *4 to 20 mA; terminals for 0.08 to 2.5 mm (28 to 14 AWG)0.08 to 2.5 mm²*
4 *Ground connection; terminals for 0.08 to 2.5 mm (28 to 14 AWG)0.08 to 2.5 mm²*
5 *GORE-TEX® filter*

Terminal box IP66/IP67 with GORE-TEX® filter incl. 3 integrated terminals.

Weight

- Level probe: 165g 165 g (5.82 oz)
- Extension cable: 32 g/m (1.129 oz/ft)
- Suspension clamp: 170 g (5.996 oz)
- Terminal box: 235 g (8.288 oz)

Materials

Materials in contact with process

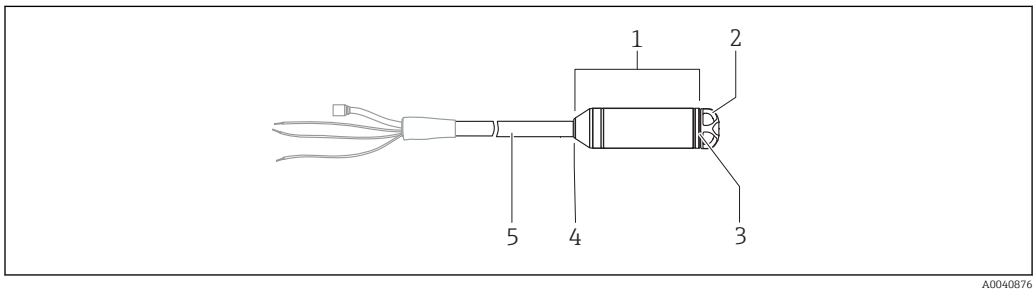

1 *Level probe: 316L (1.4404/1.4435)*
2 *Protection cap (order number: 52008999): POM*
3 *Process isolating diaphragm: 316L*
4 *Seal: EPDM*
5 *Extension cable insulation: TPE*

Extension cable

- Abrasion-resistant extension cable with strain-relief members made of high-strength PE fibers
- Shielded (aluminum)
- Insulated with TPE
- Copper wires, twisted
- Pressure compensation tube with Teflon filter

Materials not in contact with process

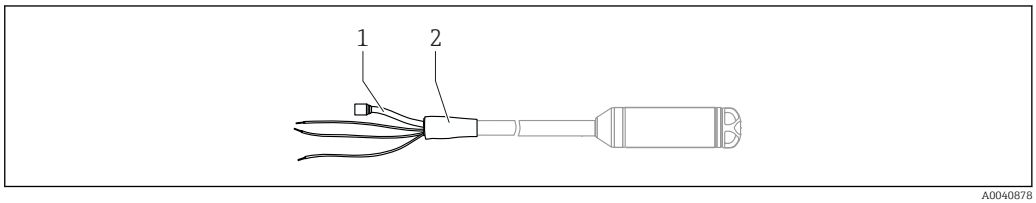

A0040878

1 Pressure compensation tube: PA
2 Heat shrink tube: polyolefin

Suspension clamp

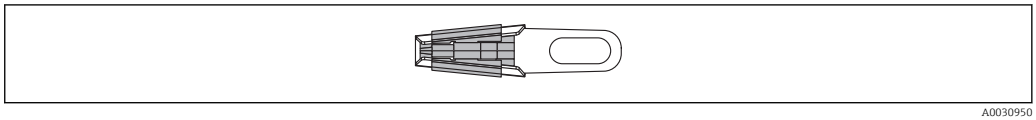

A0030950

Material: 316L (1.4404) and fiber-glass reinforced PA (polyamide)

Terminal box

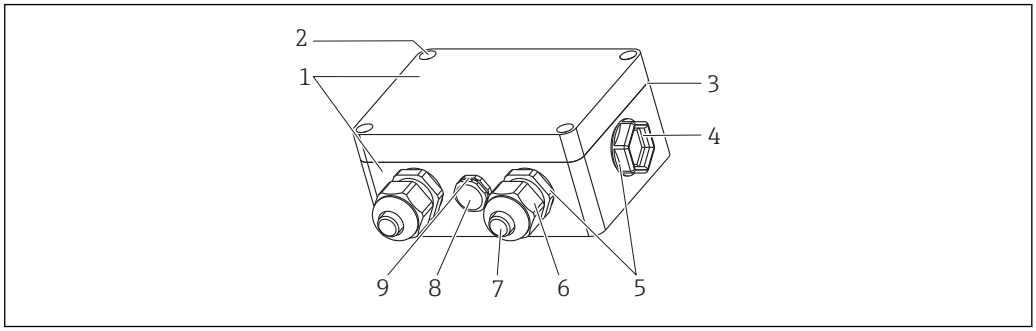

A0018917

1 Housing: PC
2 Mounting screws (4 x): A2
3 Seal: CR (chloroprene rubber)
4 Dummy plug M20x1.5: PBT-GF30
5 Cable gland M20x1.5: PE-HD
6 Cable gland M20x1.5: PA6
7 Cable gland M20x1.5: PA6-GF30
8 Pressure compensation filter: PA6-GF10, ePTFE
9 Pressure compensation filter O-ring: silicone (VMQ)

Human interface

No display or other operation facility is required to operate the device. However, the measured values can be read out with optional evaluation units.

Certificates and approvals

CE mark

The device meets the legal requirements of the relevant EC directives. Endress+Hauser confirms that the device has been successfully tested by applying the CE mark.

$_{C}UL_{US}$ listing

The measuring device is UL-listed.

Drinking water approval

KTW, NSF61, ACS, DVGW

Pressure Equipment Directive

Pressure Equipment Directive 2014/68/EU (PED)

Pressure equipment with allowable pressure ≤ 200 bar (2 900 psi)

Pressure equipment (with a maximum allowable pressure PS ≤ 200 bar (2 900 psi)) can be classified as pressure accessories in accordance with Pressure Equipment Directive 2014/68/EU. If the maximum allowable pressure is ≤ 200 bar (2 900 psi) and the pressurized volume of the pressure equipment is ≤ 0.1 l, the pressure equipment is subject to the Pressure Equipment Directive (cf. Pressure Equipment Directive 2014/68/EU, Article 4, point 3). The Pressure Equipment Directive only requires that the pressure equipment shall be designed and manufactured in accordance with the "sound engineering practice of a Member State".

Reasons:

- Pressure Equipment Directive (PED) 2014/68/EU Article 4, point 3
- Pressure Equipment Directive 2014/68/EU, Commission's Working Group "Pressure", Guideline A-05 + A-06

Note:

A partial examination shall be performed for pressure instruments that are part of safety equipment for the protection of a pipe or vessel from exceeding allowable limits (safety accessory in accordance with Pressure Equipment Directive 2014/68/EU, Article 2, point 4).

Additional certification

Calibration unit

- Sensor range; mbar/bar
- Sensor range; mm/m H2O
- Sensor range; in H2O/ft H2O

Calibration

Factory calibration certificate, 3-point

Other standards and guidelines

The applicable European guidelines and standards can be found in the relevant EU Declarations of Conformity. The following standards were also applied:

DIN EN 60770 (IEC 60770):

Transmitters for use in industrial process control systems Part 1: Methods for performance evaluation

Methods for evaluating the performance of transmitters for control and regulation in industrial process control systems.

DIN 16086:

Electrical pressure measuring instruments, pressure sensors, pressure transmitters, pressure measuring instruments, concepts, specifications on data sheets

Procedure for writing specifications in data sheets for electrical pressure measuring instruments, pressure sensors and pressure transmitters.

EN 61326:

Electrical equipment for measurement, control and laboratory use – EMC requirements

EN 61010-1 (IEC 61010-1):

Protection Measures for Electrical Equipment for Measurement, Control, Regulation and Laboratory Procedures

EN 60529:

Degrees of protection provided by enclosures (IP code)

Ordering information

Detailed ordering information is available from the following sources:
- In the Product Configurator on the Endress+Hauser website: www.endress.com-> Click "Corporate" -> Select your country -> Click "Products" -> Select the product using the filters and search field -> Open product page -> The "Configure" button to the right of the product image opens the Product Configurator.
- Your Endress+Hauser sales center: www.addresses.endress.com

Product Configurator - the tool for individual product configuration
- Up-to-the-minute configuration data
- Depending on the device: Direct input of measuring point-specific information such as measuring range or operating language
- Automatic verification of exclusion criteria
- Automatic creation of the order code and its breakdown in PDF or Excel output format
- Ability to order directly in the Endress+Hauser Online Shop

Scope of delivery
- Measuring device
- Certificates
- Optional accessories

Accessories

Device-specific accessories

Suspension clamp

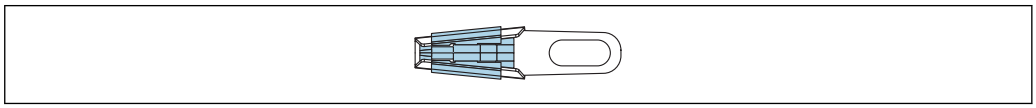

A0030950

Order number: 52006151

Terminal box

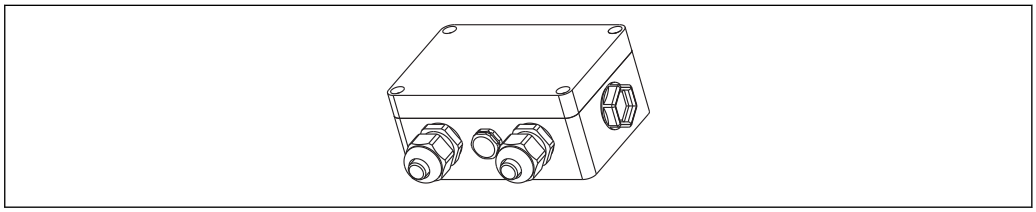

A0030967

Order number: 52006152

Supplementary documentation

For an overview of the scope of the associated Technical Documentation, refer to the following:
- *W@M Device Viewer* (www.endress.com/deviceviewer): Enter the serial number from nameplate
- *Endress+Hauser Operations App*: Enter the serial number from the nameplate or scan the 2D matrix code (QR code) on the nameplate



www.addresses.endress.com

Endress+Hauser

People for Process Automation