

LED strobe light, orange 24V

Part no. SL7-FL24-A
Article no. 171407

Catalog No. SL7-FL24-A

Delivery programme

Product range			SL7 signal towers
Basic function			Card with LED
Protection type			IP66
Rated operational voltage	U_e	V	24 V AC/DC
Type of light			Strobe light
Light elements			LED
Colour			
			Orange
			
Function			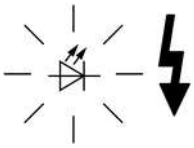
Connection to SmartWire-DT			no

Approvals

Product Standards	IEC/EN 60947-5-1; UL 508; CSA-C22.2 No. 14-10; CSA-C22.2 No. 94-91; CE marking
UL File No.	E29184
UL Category Control No.	NKCR
CSA File No.	UL report applies to both US and Canada
CSA Class No.	NKCR7
North America Certification	UL listed, certified by UL for use in Canada
Degree of Protection	UL Type 4, 4X, 13

General

Standards			IEC/EN 60947-5-1
Climatic proofing			Damp heat, constant, to IEC 60068-2-78 Damp heat, cyclic, to IEC 60069-2-30
Mounting position			As required
Mechanical shock resistance		g	> 15 according to IEC 60068-2-27 Shock duration 11 ms Sinusoidal
IEC degree of protection			IP66 IEC/EN 60529
Protection type UL			Type 4, 4X, 13
Material			Enclosure: Polycarbonate (PC), black Cap: Polycarbonate (PC)
Cap colour			
			Orange
Ambient temperature		°C	-30 - +60
Number of signal elements			Max. 5 with standard base Max. 10 with base for mounting on both sides
Weight		g	80

Contacts

Rated impulse withstand voltage	U_{imp}	V AC	4000
Rated insulation voltage	U_i	V	250
Overvoltage category/pollution degree			III/3

modules

Type of light			Strobe light

Light elements			LED
Flashing/strobe frequency			1.4 Hz
Leakage current		A	< 0.003
lifespan		h	> 100000
Transmission angle			360°
Current-/power consumption			
24 V AC/DC		A	0.130 - 0.135
Voltage levels			24 V AC/DC ± 10 %

Technical data ETIM 5.0

Low-voltage industrial components (EG000017) / Optical module for signal tower (EC000232)			
Electric engineering, automation, process control engineering / Low-voltage switch technology / Command and alarm device / Optical module for signal tower (ecl@ss8-27-37-12-20 [AKF038010])			
Function			Flash light
Colour			Orange
Outer diameter		mm	73
Degree of protection (IP)			IP66
Operating voltage at AC 50 Hz		V	24 - 24
Operating voltage at AC 60 Hz		V	24 - 24
Operating voltage at DC		V	24 - 24
Voltage type			AC/DC
Type of lamp			LED
Colour housing			Black

Dimensions

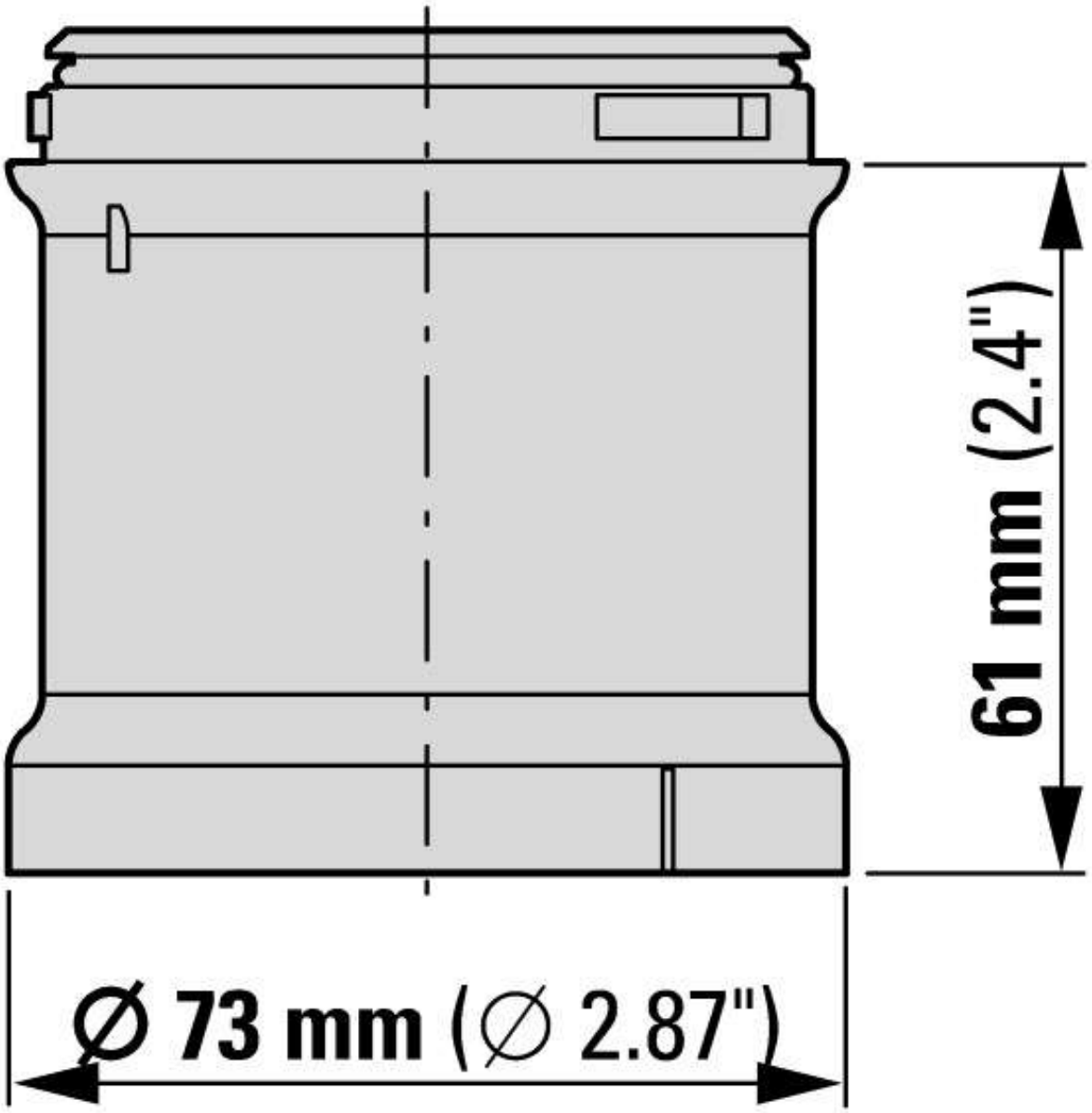

Additional product information (links)

IL047004ZU SL7 Light Modules, Tone Modules	
IL047004ZU SL7 Light Modules, Tone Modules	ftp://ftp.moeller.net/DOCUMENTATION/AWA_INSTRUCTIONS/IL047004ZU2013_02.pdf
IL047004ZU SL7, modules lumineux, modules sonores	ftp://ftp.moeller.net/DOCUMENTATION/AWA_INSTRUCTIONS/IL047004ZU2013_02.pdf

© 07/2014 by Eaton Industries GmbH