DF2520

Circuit protection module for an uninterrupted power supply

Fuse/Combi/24VDC/2x1-10A

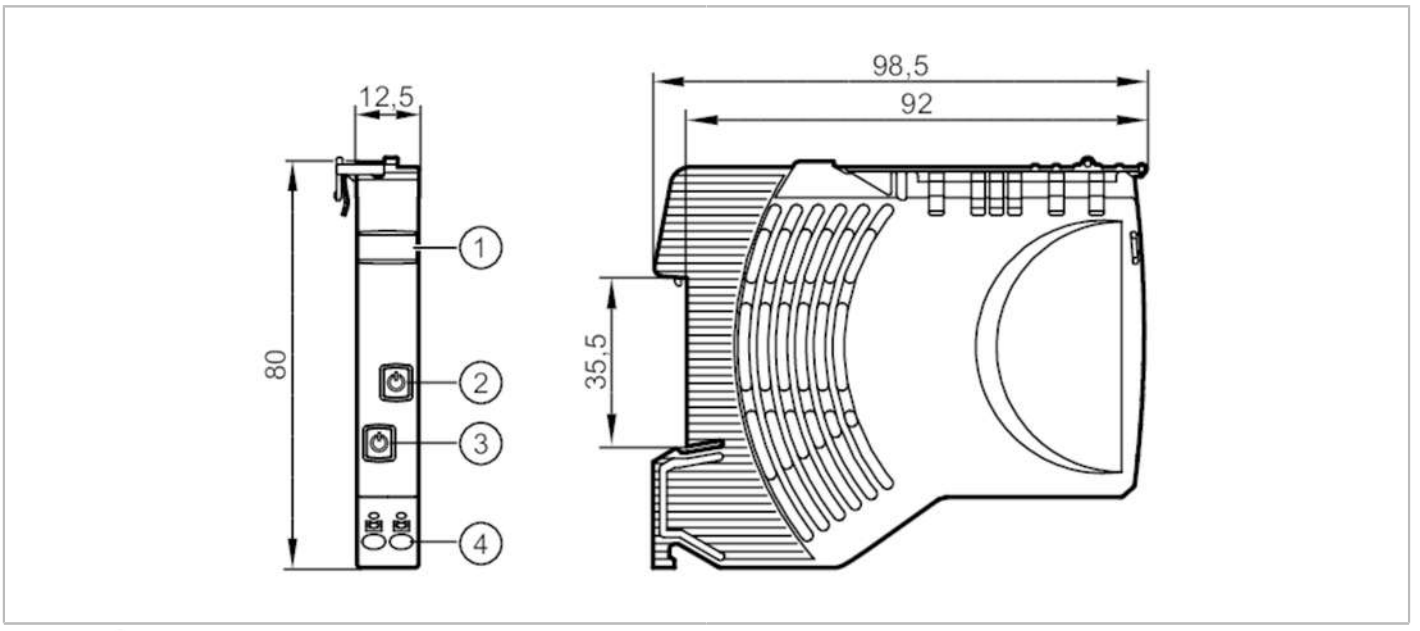

Application			
Installation		rail TH35; according to EN 60715	
Electrical data			
Operating voltage	[V]	to SELV/PELV	
Nominal voltage DC	[V]	24	
Input voltage DC	[V]	19.2...30	
Protection class		III	
Reverse polarity protection		yes	
Mains buffering time (nominal voltage 24 V DC)	[ms]	10	
Closed-circuit current	[mA]	12	
Number of channels		2	
Nominal current	[A]	1...10	
Nominal current (Fail Safe Element)	[A]	16	
Outputs			
Load capacitance, total	[mF]	20	
Operating conditions			
Ambient temperature	[°C]	-25...60	
Storage temperature	[°C]	-40...70	
Protection		IP 20; (on the front)	
Pollution degree		2	
Tests / approvals			
EMC		EN 61000-6-3	radiation of interference
		EN 61000-6-2	immunity
Mechanical data			
Weight	[g]	81.7	

DF2520

Circuit protection module for an uninterrupted power supply

Fuse/Combi/24VDC/2x1-10A

Dimensions [mm]	80 x 12.5 x 98	

Displays / operating elements

Display	status	2 x LED, red / green / orange
Operating elements	2 x	pushbutton

Electrical connection

push-in terminals:

contact lever/strip:

Connection

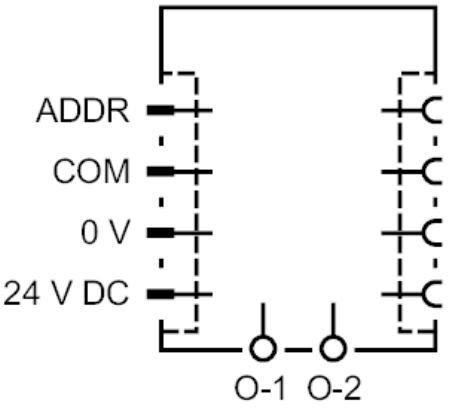

Diagrams and graphs

output characteristics

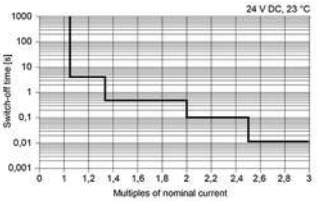

time-current characteristics