SKF high temperature bearings

For operating temperatures
up to 350 °C *(660 °F)*





Contents

SKF – the knowledge engineering company **4**

Reduce maintenance. Run Longer. Run Cleaner. **7**
SKF high temperature bearings run trouble-free 7
Common issues in high temperature applications 8
The SKF high temperature bearing solution 8
The SKF advantage: optimum performance, efficiency and savings 8
Customer benefits 9

Applications. **10**
Proven performance across industries 10
Cooling bed for steel plates 11
Roll-out table for slabs, billets and blooms 12
Guide rolls in wire mill 13
Continuous baking ovens 14
Wafer baking ovens 15
Steel plate conveyor for hot material 16
Paint lines 17

Assortment. **18**
Deep groove ball bearings for high temperature applications . . . 20
Y-bearings and Y-bearing units for high temperature applications 22
Spherical roller bearings for high temperature applications 24
Lubrication and running in 25
Loads and selecting bearing size 25
Design of bearing arrangements 27
Bearing data 32

Product tables
Deep groove ball bearings for high temperature applications . . . 34
Spherical roller bearings for high temperature applications 40
Y-bearings for high temperature applications, metric shafts 44
Y-bearings for high temperature applications, inch shafts 45
Y-bearing plummer block units for high temperature applications, metric shafts 48
Y-bearing plummer block units for high temperature applications, inch shafts 50
Flanged Y-bearing units with a cast housing with a square flange for high temperature applications, metric shafts 54
Flanged Y-bearing units with a cast housing with a square flange for high temperature applications, inch shafts 56
Flanged Y-bearing units with a cast housing with an oval flange for high temperature applications, metric shafts 60
Flanged Y-bearing units with a cast housing with an oval flange for high temperature applications, inch shafts 62

SKF – the knowledge engineering company





From one simple but inspired solution to a misalignment problem in a textile mill in Sweden, and fifteen employees in 1907, SKF has grown to become a global industrial knowledge leader.
Over the years, we have built on our expertise in bearings, extending it to seals, mechatronics, services and lubrication systems. Our knowledge network includes 46 000 employees, 15 000 distributor partners, offices in more than 130 countries, and a growing number of SKF Solution Factory sites around the world.

Research and development

We have hands-on experience in over forty industries based on our employees' knowledge of real life conditions. In addition, our world-leading experts and university partners pioneer advanced theoretical research and development in areas including tribology, condition monitoring, asset management and bearing life theory. Our ongoing commitment to research and development helps us keep our customers at the forefront of their industries.

Meeting the toughest challenges

Our network of knowledge and experience, along with our understanding of how our core technologies can be combined, helps us create innovative solutions that meet the toughest of challenges. We work closely with our customers throughout the asset life cycle, helping them to profitably and responsibly grow their businesses.

Working for a sustainable future

Since 2005, SKF has worked to reduce the negative environmental impact from our operations and those of our suppliers. Our continuing technology development resulted in the introduction of the SKF BeyondZero portfolio of products and services which improve efficiency and reduce energy losses, as well as enable new technologies harnessing wind, solar and ocean power. This combined approach helps reduce the environmental impact both in our operations and our customers' operations.

SKF Solution Factory makes SKF knowledge and manufacturing expertise available locally to provide unique solutions and services to our customers.



Working with SKF IT and logistics systems and application experts, SKF Authorized Distributors deliver a valuable mix of product and application knowledge to customers worldwide.



Our knowledge – your success

SKF Life Cycle Management is how we combine our technology platforms and advanced services, and apply them at each stage of the asset life cycle, to help our customers to be more successful, sustainable and profitable.

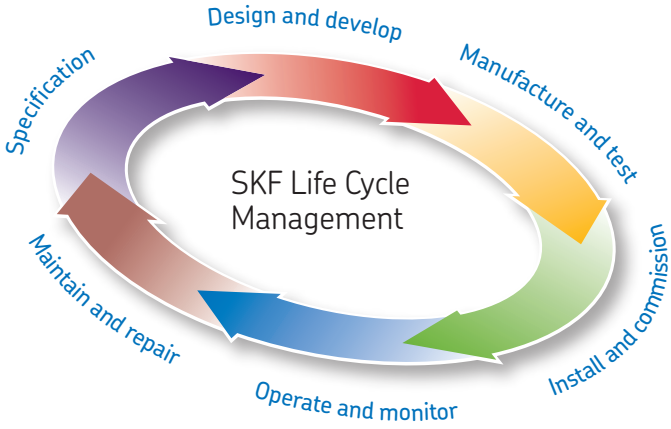

Working closely with you

Our objective is to help our customers improve productivity, minimize maintenance, achieve higher energy and resource efficiency, and optimize designs for long service life and reliability.

Innovative solutions

Whether the application is linear or rotary or a combination, SKF engineers can work with you at each stage of the asset life cycle to improve machine performance by looking at the entire application. This approach doesn't just focus on individual components like bearings or seals. It looks at the whole application to see how each component interacts with each other.

Design optimization and verification

SKF can work with you to optimize current or new designs with proprietary 3-D modelling software that can also be used as a virtual test rig to confirm the integrity of the design.



Bearings
SKF is the world leader in the design, development and manufacture of high performance rolling bearings, plain bearings, bearing units and housings.



Machinery maintenance
Condition monitoring technologies and maintenance services from SKF can help minimize unplanned downtime, improve operational efficiency and reduce maintenance costs.



Sealing solutions
SKF offers standard seals and custom engineered sealing solutions to increase uptime, improve machine reliability, reduce friction and power losses, and extend lubricant life.



Mechatronics
SKF fly-by-wire systems for aircraft and drive-by-wire systems for off-road, agricultural and forklift applications replace heavy, grease or oil consuming mechanical and hydraulic systems.



Lubrication solutions
From specialized lubricants to state-of-the-art lubrication systems and lubrication management services, lubrication solutions from SKF can help to reduce lubrication related downtime and lubricant consumption.



Actuation and motion control
With a wide assortment of products – from actuators and ball screws to profile rail guides – SKF can work with you to solve your most pressing linear system challenges.

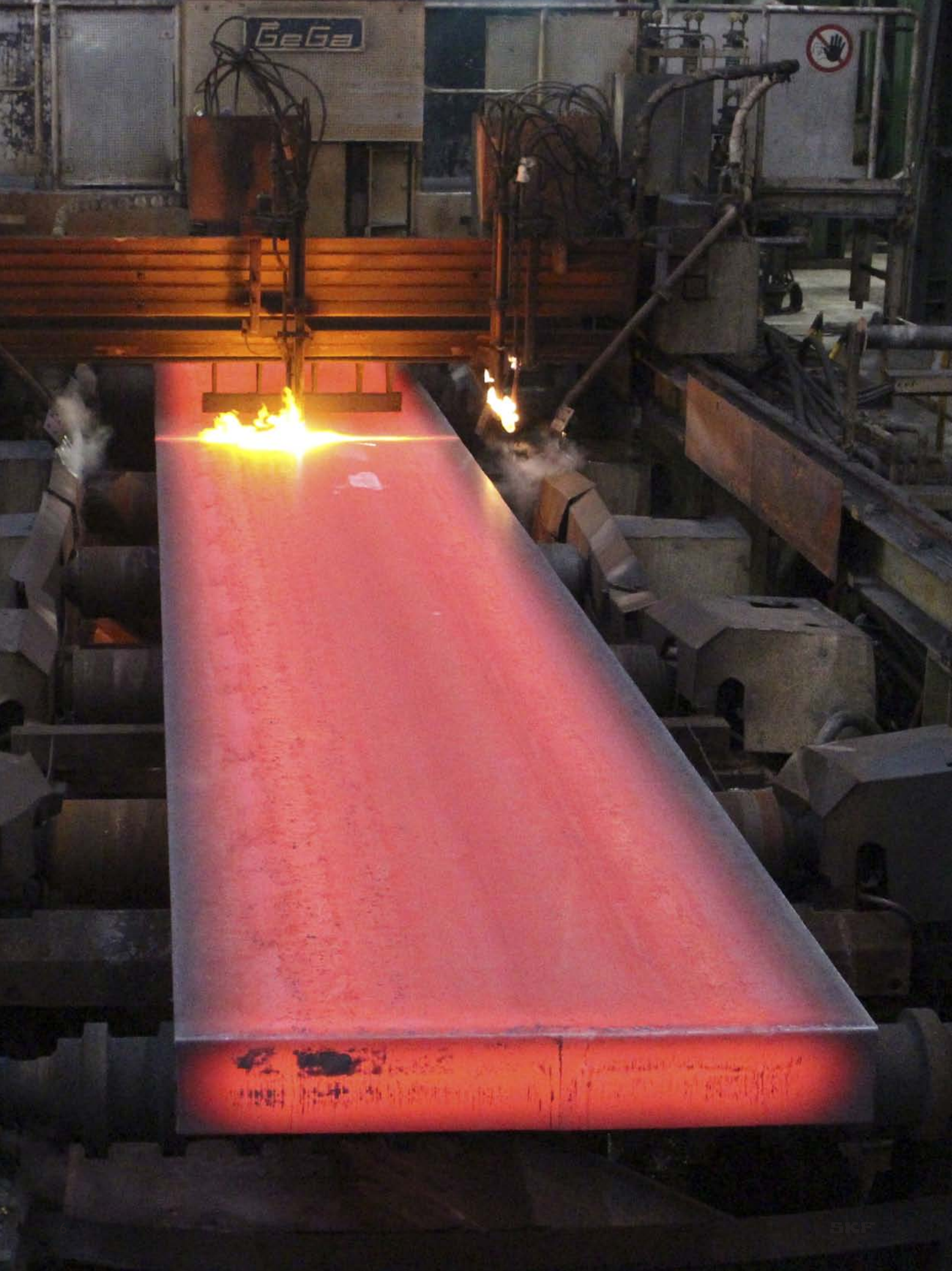
GeGa

Reduce maintenance. Run longer. Run cleaner.

Bearings operating in high temperature applications can be unreliable due to premature failure. The result is high costs and time wasted on frequent bearing replacements. SKF offers a solution with an assortment of bearings designed to reduce maintenance, run longer and cleaner in high temperature applications.

SKF high temperature bearings run trouble-free

SKF high temperature bearings incorporate a graphite-based lubrication that continuously lubricate the bearing, eliminating the use of grease and oil. Ideal for applications in industries such as metals and food & beverage, these bearings are designed for trouble-free operation at temperatures up to 350 °C *(660 °F)*.

SKF high temperature bearings provide:

- Reduced total operating cost through increased bearing service life
- Relubrication-free operation
- Reduced machine complexity
- Reduced environmental impact
- Excellent performance in hot conditions, dry environments and applications with low rotational speeds



Common issues in high temperature applications

Bearings operating in high temperature applications may be impacted by a number of factors that can reduce bearing service life. Common issues include:

Inadequate lubrication

At high temperatures, lubricating grease or oil becomes very thin. Oil that is too thin, in combination with low rotational speeds, results in metal-to-metal contact in the bearing. This will cause wear, leading to noise and excessive play (→ **fig. 1**).

Short grease life

Grease ages rapidly at high temperatures, resulting in the need for very frequent relubrication. This is time consuming and costly and is a task that can be forgotten or even neglected. Frequent relubrication also creates the potential to over-fill the bearing, increasing the risk of excess grease contaminating the process and possibly catching fire. Additionally, old grease left in the bearings can carbonize at high temperatures and block the bearings (→ **fig. 2**).

Loss of internal bearing clearance

When temperatures rise above the bearing stabilization temperature, thermal expansion and material structural changes will occur in the bearing. This can lead to an uncontrolled loss of internal radial clearance, and ultimately seized bearings (→ **fig. 3**).

The SKF high temperature bearing solution

SKF high temperature bearings are designed for challenging operating conditions, with variants capable of performing at temperatures as high as 350 °C *(660 °F)*. These bearings incorporate graphite-based lubrication which can lubricate at high temperatures and low speeds, eliminating the risk of metal-to-metal contact. Unlike grease and oil, graphite does not age and will not lose its lubricating properties at temperatures up to 350 °C *(660 °F)*. This eliminates the need to relubricate SKF high temperature bearings. Additionally, these bearings are designed with a special radial clearance specified to maintain the required radial clearance at high operating temperatures. This avoids bearing seizure and enables a long service life.

The SKF advantage: optimum performance, efficiency and savings

SKF high temperature bearings are designed to deliver increased reliability, reduced complexity, and decreased environmental impact. Because high temperature bearings correspond to the ISO boundary dimensions for standard bearings, production efficiencies and cost savings can be realized with a simple change to SKF high temperature bearings.

Inadequate lubrication cause wear which can be recognized by noise and excessive play



A bearing housing in a steel mill lubricated with excessive amount of grease.



Loss of internal radial clearance leading to a seized bearing

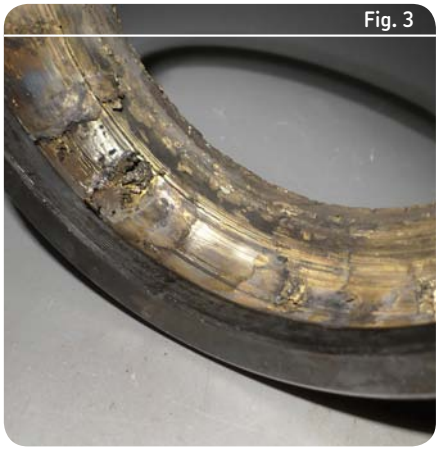

Customer benefits

Increased reliability, reduced maintenance

By eliminating temperature related bearing failures, SKF high temperature bearings improve machine uptime, output and overall reliability. The SKF solution also eliminates the need to frequently relubricate bearings operating at high temperatures. This provides greater peace of mind, while enhancing operational efficiencies and cost savings.

Reduced complexity

Because SKF high temperature bearings are designed for relubrication-free operation at temperatures up to 350 °C *(660 °F)*, manual and automatic lubrication systems are eliminated along with their related costs and issues. Complex cooling systems used to reduce bearing operating temperatures may also be unnecessary.

Reduced environmental impact

Global factors

The significant environmental benefits of SKF high temperature bearings qualify them for inclusion in the SKF Beyond Zero product portfolio. These products are designed to reduce environmental impact and contribute to sustainability efforts (**→ diagram 1**).

Workplace and process safety

With grease removed from the process environment, relubrication procedures in potentially dangerous areas of the operation can be avoided. Slippery surfaces from grease leakage and the risk of excess grease catching fire are eliminated. SKF high temperature bearings also contribute to food safety, because there is no risk of process lines and products being contaminated by grease.

Diagram 1

SKF high temperature bearings reduce CO_2-emissions in a cooling bed for steel plates

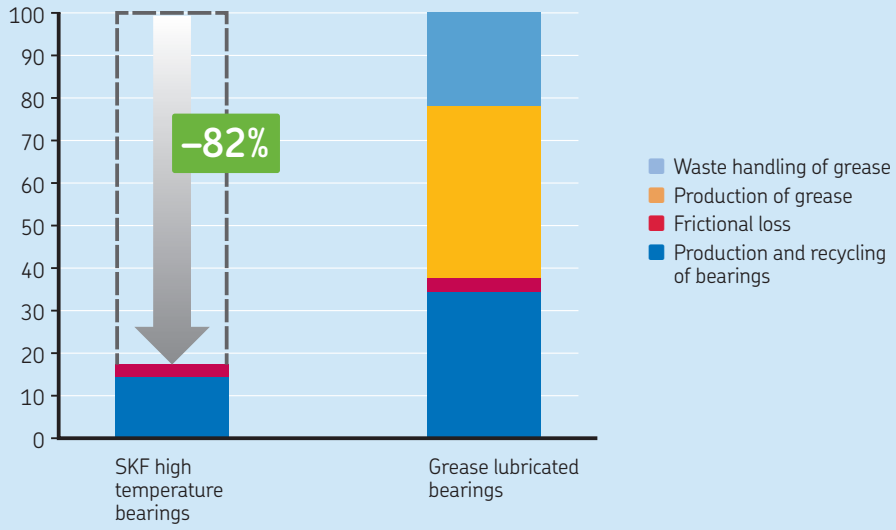

Environmental impact of SKF high temperature bearings compared to grease lubricated bearings

Applications





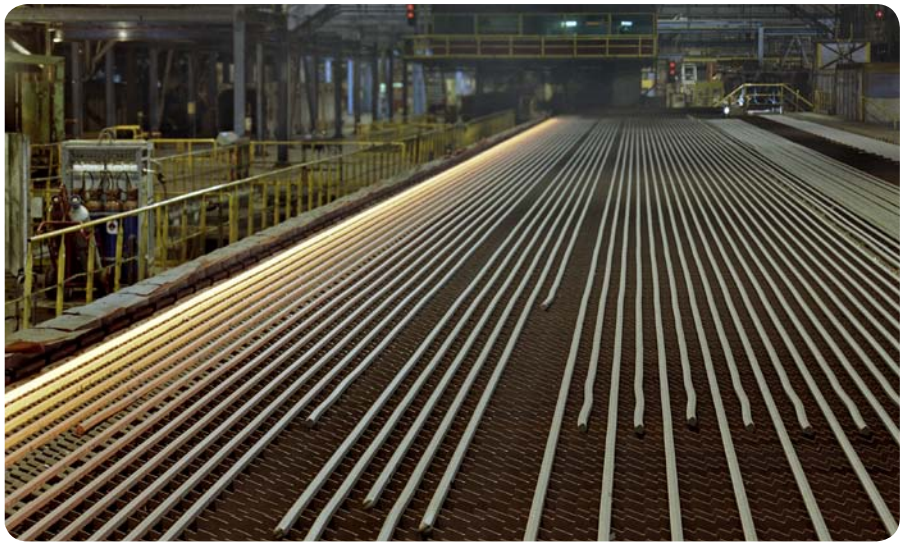

Proven performance across industries

SKF high temperature bearings provide solutions that are proven in a number of different applications across a variety of industries. Even if the design and purpose of the bearing applications differ greatly, they all share common operating conditions that are ideal for graphite lubrication.

To prove the benefits of SKF high temperature bearings, examples of successful installations are shown on the next few pages. Get inspiration from what other customers have done and experience the benefits and savings in your operation.



A large cooling bed for steel plates. Each wheel is supported by four high temperature bearings.

Cooling bed for steel plates

In hot rolling mills, extremely large cooling beds accumulate and allow steel plates to cool. They use thousands of bearings, operating in intense heat standing still or rotating very slowly. A customer operating this application was using grease lubricated deep groove ball bearings with C4 radial clearance.

Customer issues

The large number of bearings required large amounts of grease, making relubrication costly, difficult and time consuming.

Rollers that would not rotate due to seized bearings created scratches on the steel plates. Replacing failed bearings was causing costly downtime.

Customer case

Grease-lubricated, deep groove ball bearings were replaced with SKF high temperature bearings. A total of 5 000 SKF bearings were installed. Performance improvements were immediately realized, including:

- Bearing service life increased from 6 months to more than six years
- Return on investment achieved in eight months
- Savings realized through eliminating grease purchase and waste handling costs
- Reduced maintenance time and costs
- Improved product quality (scratch marks eliminated)
- Reduced bearing related CO_2 emissions by 82%



SKF 6212-2Z/VA228 high temperature bearings are an outstanding solution for cooling beds.



Roll-out table transporting slabs from a continuous casting machine.

Roll-out table for slabs, billets and blooms

In the metal industry, roll-out tables transport hot steel between processes. Bearings supporting the rolls rotate slowly under high temperatures. In this application, a customer was using grease-lubricated, spherical roller bearings.

Customer issues

Despite frequent relubrication, the bearings had a short service life. Machine reliability was poor and maintenance costs were high. Seized bearings created scratch marks on the steel product.

Failure of the roll-out table resulted in unplanned and costly downtime.

Customer case

SKF high temperature bearings were installed in the dry sections of the process. The grease-lubricated bearings and cooling system were removed. The customer achieved performance advantages including:

- Bearing service life increased from eight months to three years
- Improved roller table reliability, with fewer unplanned stops
- Reduced maintenance and costs
- Improved safety by eliminating lubricant leakage and dangerous relubrication tasks in a hot environment
- Return on investment achieved in 10 months



SKF 22220 E/C4VA237 high temperature bearings provide superior reliability in roll-out tables.



Guide rolls in a wire mill

Guide rolls in wire mill

In wire production, the product is hot rolled into the final dimension. A process involving high operating temperatures for the bearings. A customer was operating a wire mill using guide rolls equipped with standard deep groove ball bearings. A centralized oil/air lubrication system was used to lubricate and cool the bearings.

Customer issues

With a bearing service life of less than 20 days, frequent and costly bearing replacement was necessary.

The sensitive lubrication and cooling system often malfunctioned, and as such toxic fumes were generated when excessive bearing lubricant reached the hot rolled material.

Customer case

In the dry sections of the process, SKF high temperature bearings were installed in place of the oil/air lubricated bearings. Performance enhancements and operational efficiencies were immediately generated, including:

- Service life extended from 20 days to six months
- Toxic fumes eliminated
- Reduced machine complexity and energy use by removal of oil/air lubrication system
- Increased machine reliability
- Reduced maintenance costs



SKF 6207-2Z/C4VA237 high temperature bearings offer increased service life and improved reliability in guide roll applications.

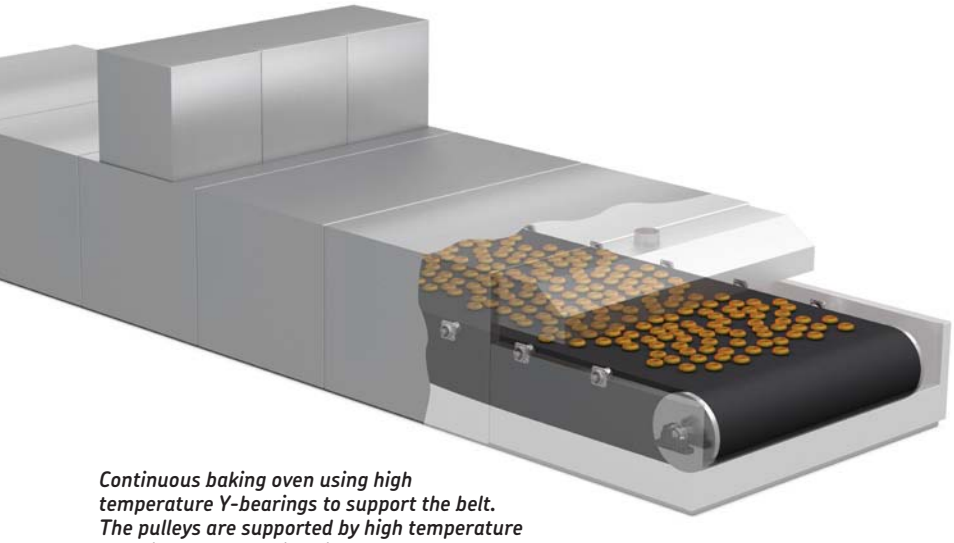

Continuous baking oven using high temperature Y-bearings to support the belt. The pulleys are supported by high temperature spherical roller bearings in a standard SNL housing.

Continuous baking ovens

Continuous baking ovens are used by large-volume industrial bakeries. Requirements for throughput and reliability are very high. Bearings rotate slowly and are exposed to high temperatures. A customer was using grease-lubricated Y-bearing units in a continuous baking oven.

Customer issues

High operating temperatures caused inadequate lubrication, increased wear in the bearings, poor reliability, unplanned stops and ultimately failure. Frequent relubrication using expensive high temperature grease required costly maintenance, while used grease ejected from the bearings created a risk of food contamination and worker safety issues.

Customer case

The grease-lubricated bearing units were replaced with SKF high temperature Y-bearing units, resulting in a number of performance and productivity enhancements, including:

- Bearing service life extended from six to 36 months
- Return on investment achieved in less than eight months
- SKF solution is NSF H1 certified
- High temperature bearings enabled higher process temperatures resulting in higher output
- Significantly improved reliability
- Maintenance costs reduced
- Food and worker safety improved due to the elimination of grease



SKF high temperature Y-bearing units FY 25 TF/VA228 can enable higher output and reduced costs in food and beverage operations.

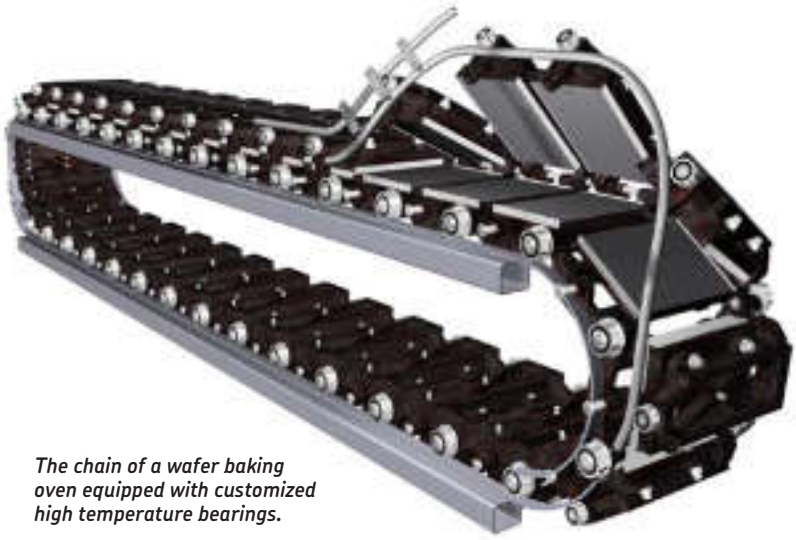

The chain of a wafer baking oven equipped with customized high temperature bearings.

Wafer baking ovens

Producers of confectionary products use fully automated wafer baking ovens for high-volume production. A food and beverage manufacturer running this process was using deep groove ball bearings lubricated with high temperature grease.

Customer issues

Bearing relubrication was needed every 16 weeks, requiring costly planned maintenance. Grease leakage impacted food safety. Output was limited by the oven temperature restrictions of grease-lubricated bearings.

Customer case

SKF high temperature wafer units were installed. These bearings incorporate graphite-based lubrication that continuously lubricates the bearing. Cost effectiveness and productivity were improved through benefits including:

- The relubrication-free wafer units ran for 5 years 24/7
- Eliminated costs for high temperature grease
- Eliminated 150 hours of labour annually
- 26 hours of planned down-time every 16 weeks was eliminated, increasing productivity through reduced maintenance
- Increased output, as graphite lubrication allows for higher process temperature
- Food and worker safety improved, due to eliminated consumption of grease

SKF high temperature flanged carrier wheel units and smaller un-flanged top roller units offer relubrication-free performance and reliability in automatic wafer baking ovens.
BB1-5067 B (carrier wheel)
BB1-5098 B (top roller)



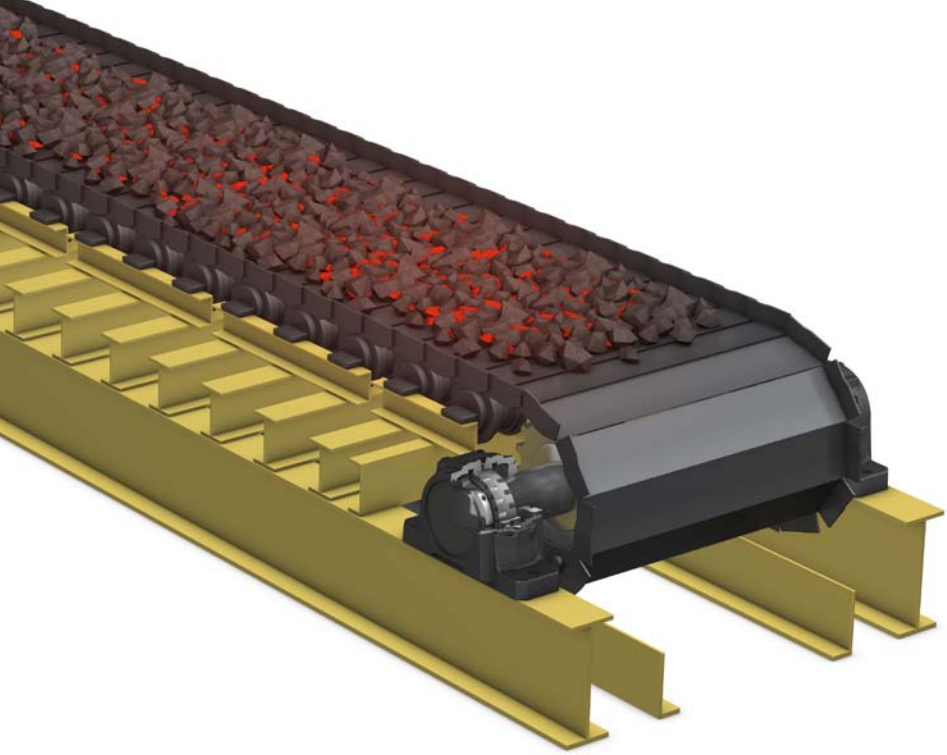

High temperature bearings are used in conveyors for hot material

Steel plate conveyor for hot material

A metal industry customer was using a steel plate conveyor system to transport hot material between processes. The grease-lubricated, deep groove ball bearings and spherical roller bearings used in the system operated at temperatures up to 250 °C *(480 °F)*, and at low rotational speeds.

Customer issues

Bearing service life was less than one week. Radiated heat from the transported hot material caused inadequate lubrication, resulting in elevated noise levels and increased play in the bearings.

The specified weekly relubrication was difficult, could only be done while the conveyor was stopped and offered no increase in bearing service life. Failed bearings required frequent replacement of conveyor bearings and wheels. Stops in the conveyor negatively affected production efficiency.

Customer case

The grease-lubricated, deep groove ball bearings and spherical roller bearings were replaced with SKF high temperature bearings resulting in a number of advantages including:

- Bearing service life extended from 8 to 12 weeks to more than one year
- Improved conveyor reliability
- No relubrication needed



SKF 22207 E/C4VA237 high temperature bearings can significantly increase service life in steel plate conveyors for hot material.

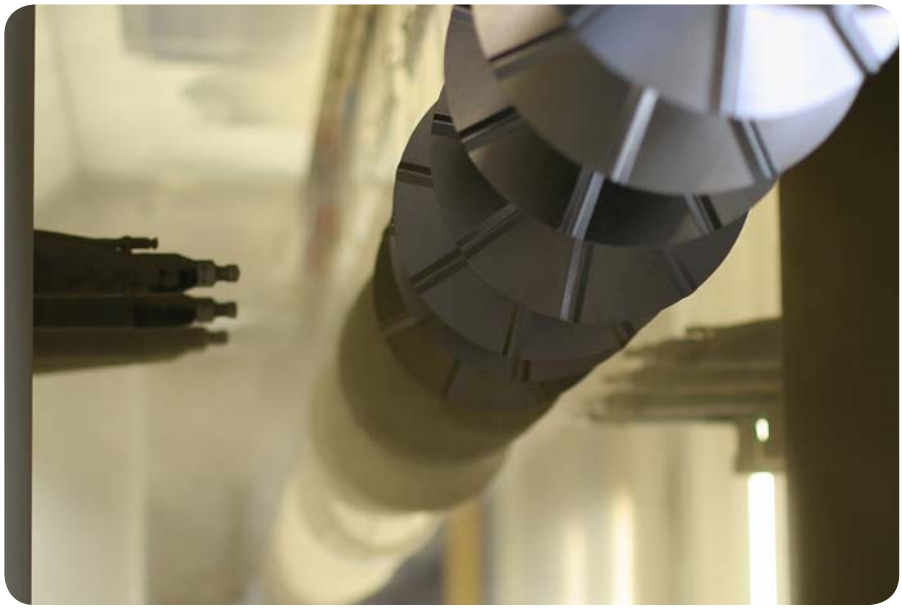

Paint line conveyors are supported by wheels equipped with graphite lubricated bearings.

Paint lines

Paint lines are conveyor systems that transport parts as they are painted and dried. For one customer, the bearing operating temperature in the drying section was up to 200 °C (*390 °F*). Deep groove ball bearings lubricated with high temperature grease needed frequent relubrication.

Customer issues

Painted car chassis frequently needed to be reworked due to paint damage caused by lubrticant leakage from the bearings. Grease could stain the drying paint, an issue made worse when water-based paints were used. The high temperature greases used were not PWIS-free (Paint-Wetting Impairment Substances). Damage to the paint on chassis parts caused production stops.

Customer case

The grease-lubricated bearings were replaced with SKF high temperature bearings. Quality and productivity in the paint line was significantly improved, with results including:

- Reduction in the number of chassis needing rework
- Significant increase in paint line efficiency
- Reduced downtime

SKF high temperature bearings are available in versions that apply to common PWIS standards.



SKF 6205-2Z/VA292 high temperature bearings offer a PWIS-free solution for paint-line drying processes.

Assortment

SKF offers a wide assortment of high temperature bearings and units according to ISO standards and also an assortment of customized high temperature bearings.

Selection of an appropriate high temperature bearing is based on the bearing type and the operating conditions (primarily the temperature and speed) of the machinery.

The SKF basic assortment of high temperature bearings and bearing units corresponding to ISO standards includes:

- deep groove ball bearings
- Y-bearings (insert bearings)
- Y-bearing units
- spherical roller bearings

The assortment includes variants that contain food-grade lubricants registered by NSF as category H1 (lubricant acceptable with incidental food contact for use in and around food processing areas).

In paint line applications, it is critical that the paint quality of the end product is not impaired by contamination. To address this need for high temperature paint lines, SKF offers high temperature bearings variant VA292 that have the same bearing characteristics as version VA228 (table 1) but, in addition, comply with common PWIS standards (Paint Wetting Impairment Substance).

Other high temperature bearing types

In addition to the basic assortment, SKF can also supply high temperature variants of the following bearing types, according to ISO boundary dimension standards:

- cylindrical roller bearings
- tapered roller bearings
- thrust ball bearings

These bearings use SKF's patented solid graphite lubricant with high-speed additives. For additional information, contact SKF.

On request, SKF can supply other high temperature bearings to meet the needs of a particular application. For information about these engineered products, contact the SKF application engineering service.

Customized high temperature bearings

In addition to high temperature bearings corresponding to ISO standards, SKF offers an assortment of customized high temperature bearings.

These bearings are customized for use in equipment such as automatic wafer baking ovens in the food and beverage industry, in industrial furnaces and in chains. For additional information, contact SKF.



Deep groove ball bearing



Spherical roller bearing



Y-bearing unit

Ideal operating conditions for SKF high temperature bearings

SKF high temperature bearings are designed to provide solutions to common issues in high temperature applications. In addition to operations involving high temperature, it is important to consider environmental conditions in the process area and the rotational speed of the shaft.

SKF high temperature bearings are an excellent choice for applications operating in hot environments with dry conditions and low rotational speeds. The hot, dry and slow criteria can be used as a rule of thumb for evaluating the use of graphite-lubricated bearings.



Hot:
Hot refers to operating temperatures up to 350 °C (660 °F) where grease-lubricated bearings often have a short service life. SKF high temperature bearings offer exceptional performance in positions affected by high operating temperatures.



Dry:
Due to very limited protection against corrosion, graphite-lubricated bearings must be kept dry.



Slow:
In slowly rotating applications running at high temperatures, oil and grease lubricants become too thin to generate a lubrication film of sufficient thickness to prevent metal-to-metal contact. SKF graphite-lubricated bearings are designed to handle these conditions.

Deep groove ball bearings for high temperature applications

The SKF range of deep groove ball bearings for high temperature applications provides solutions for various combinations of operating temperature and speed. All variants are lubricated for the life of the bearing, except for open VA201 bearings (that is, without integral shields) which require relubrication.

Features and benefits of high temperature deep groove ball bearings

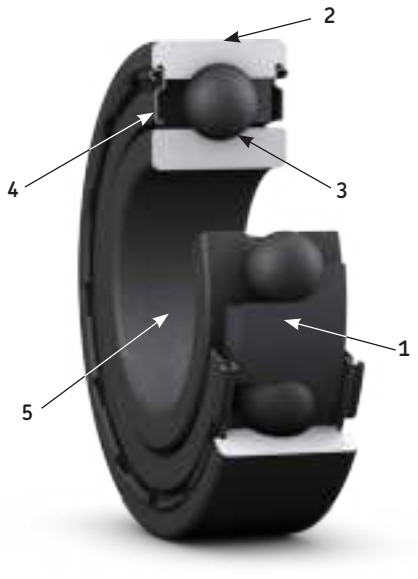

1 **no need for relubrication**[1)]
– the bearings are lubricated with graphite-based high temperature lubricants and are lubricated for the life of the bearing
2 **simple replacement**
– the boundary dimensions are the same as those of standard bearings
3 **operating temperature up to 350 °C *(660 °F)***
– the internal radial clearance and the lubricant are optimized for operation at high temperatures
4 **protection against contamination**
– shields (designation suffix 2Z) protect the bearing
5 **improved running in**
– with some variants, the entire bearing surface is manganese phosphate coated

[1)] All variants, except for VA201 open bearings (that is, without integrated shields), are lubricated for the life of the bearing

VA228 – SKF highest performance at temperatures up to 350 °C *(660 °F)*

VA228 is an excellent choice for machinery operating with low speeds or oscillating movements in combination with very high operating temperatures. This bearing offers outstanding performance at temperatures up to 350 °C *(660 °F)* through the combination of the solid graphite cage, an adjusted high temperature bearing radial internal clearance and integral shields.

VA267 – Unique solution for higher speeds and temperatures up to 250 °C *(480 °F)*

VA267 is the preferred choice for deep groove ball bearings required to operate above the limiting speed for VA228 at temperatures up to 250 °C *(480 °F)*. The VA267 bearing incorporates a patented, solid-graphite lubricant with high-speed additives, an adjusted high temperature bearing radial internal clearance and integral shields.





VA208 – Improved performance at temperatures up to 350 °C *(660 °F)*

The VA208 bearing is lubricated by a segmented graphite cage. The large amount of lubricating graphite gives a long service life at temperatures up to 350 °C *(660 °F)*.

VA201 – Basic performance at temperatures up to 250 °C *(480 °F)*

The VA201 bearing is lubricated with a polyalkylene glycol/graphite mixture suitable for temperatures up to 250 °C *(480 °F)*. Version VA201 is an open bearing (without shields) while the 2Z/VA201 has an integral shield on both sides. Both versions are supplied pre-filled with lubricant. VA201 can be re-lubricated whilst-2Z/ VA201 is lubricated for the life of the bearing. Depending on the speed and operating temperature, a special running-in procedure might be required (→ *Lubrication and running in*, **page 25**).

Table 1

Characteristics of high temperature variants for deep groove ball bearings

Characteristic	Variant VA201	VA208	VA228	VA267	VA237
Lubrication type	Polyalkylene glycol/ graphite mixture	Segmented cage made of graphite	Coronet cage made of graphite	Patented solid graphite lubricant with high-speed additives	
Phosphated rings, rolling elements and cages	yes	yes	yes	yes	no
NSF H1 food grade	no	yes	yes	no	no
Shields (designation suffix 2Z)	yes / no (open bearing)	yes	yes	yes	yes
Relubrication free	yes / no (open bearing)	yes	yes	yes	yes
Maximum operating temperature	250 °C *(480 °F)*	350 °C *(660 °F)*	350 °C *(660 °F)*	250 °C *(480 °F)*	150 °C *(300 °F)* (C4 internal radial clearance)
Limiting speed [r/min][1)]	4 500/d_m	4 500/d_m	9 000/d_m	60 000/d_m	96 000/d_m (C4 internal radial clearance)

[1)] d_m = bearing mean diameter = 0,5 (d + D). For outer ring rotation, use d_m = D.

Y-bearings and Y-bearing units for high temperature applications

The SKF assortment of Y-bearings and Y-bearing units for high temperature applications, provides solutions for various temperature and speed combinations. Y-bearing units are available in three different designs. All variants are lubricated for the life of the bearing.



Features and benefits of high temperature Y-bearing units

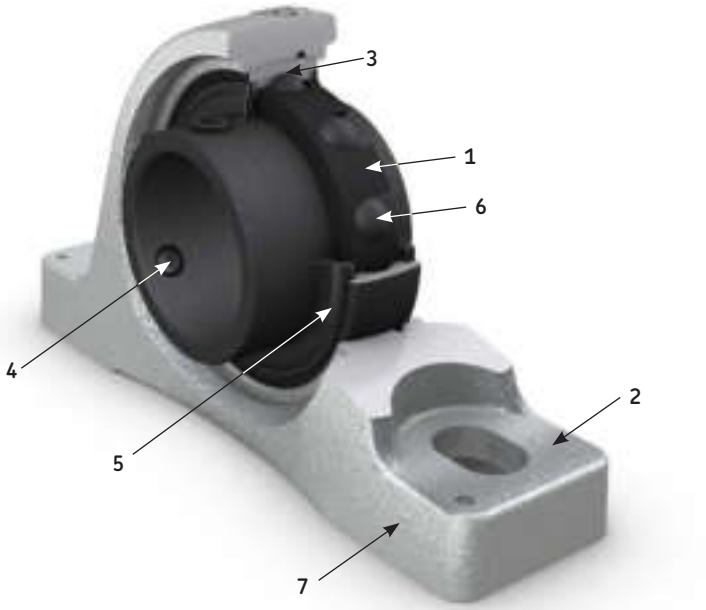

1 no need for relubrication
– the bearings are lubricated with graphite-based high temperature lubricants and, as such, are lubricated for the life of the bearing

2 simple replacement
– the boundary dimensions are the same as those of standard bearings and units

3 operating temperature up to 350 °C *(660 °F)*
– the radial internal clearance and the lubricant are optimized for operation at high temperatures

4 simple mounting and dismounting
– the grub (set) screws in the inner ring make mounting/dismounting easy

5 protection against contamination
– shields and flingers (designation suffix 2F) protect the bearing

6 improved running in
– the entire bearing surface is manganese phosphate coated

7 no colour flaking
– the housing is coated with a high temperature resistant coating



VA228- SKF highest performance at temperatures up to 350 °C *(660 °F)*

VA228 is an excellent choice for machinery operating with low speeds or oscillating movements in combination with very high operating temperatures. This bearing offers outstanding performance at temperatures up to 350 °C *(660 °F)* through the combination of the solid graphite cage, an adjusted high temperature bearing radial internal clearance and integral shields and flingers.



VA267- Unique solution for higher speeds and temperatures up to 250 °C *(480 °F)*

VA267 is the preferred choice for Y-bearings and Y-bearing units required to operate above the limiting speed for VA228, at temperatures up to 250 °C *(480 °F)*. The VA267 bearing incorporates a patented, solid-graphite lubricant with high-speed additives, an adjusted high temperature bearing radial internal clearance and integral shields and flingers.

VA201 – Basic performance at temperatures up to 250 °C *(480 °F)*

The VA201 bearing is lubricated with a polyalkylene glycol/graphite mixture suitable for temperatures up to 250 °C *(480 °F)*. Version VA201 is an open bearing (without shields) while version -2Z/VA201 has integral shields on both sides. Both versions are supplied pre-filled with lubricant. VA201 can be relubricated while the -2Z/ VA201 is lubricated for the life of the bearing. Depending on the speed and operating temperature, a special running-in procedure might be required (→ *Lubrication and running in*, **page 25**).

Table 2

Characteristics of high temperature variants for Y-bearing and Y-bearing units

Characteristic	Variant VA201	VA228	VA267
Lubrication type	Polyalkylene glycol/graphite mixture	Coronet cage made of graphite	Patented solid graphite lubricant with high-speed additives
Phosphated rings, rolling elements and cages	yes	yes	yes
NSF H1 food grade	no	yes	no
Shields (suffix 2FW)	yes	yes	yes
Relubrication free	yes	yes	yes
Maximum operating temperature	250 °C *(480 °F)*	350 °C *(660 °F)*	250 °C *(480 °F)*
Limiting speed [r/min][1)]	4 500/d_m	9 000/d_m	60 000/d_m

[1)] d_m = bearing mean diameter = 0,5 (d + D).

Spherical roller bearings for high temperature applications

The SKF assortment of spherical roller bearings for high temperature applications provides solutions for various operating environments and industries. All variants are lubricated for the life of the bearing.

Features and benefits of high temperature spherical roller bearings



1 no need for relubrication
– the bearings are lubricated with graphite-based high temperature lubricants and, are lubricated for the life of the bearing

2 simple replacement
– the boundary dimensions are the same as those of standard bearings

3 operating temperature up to 250 °C *(480 °F)*
– C4 radial internal clearance, high dimensional stablilty and high temperature lubricant permits high operating temperatures



VA237 – For optimal spherical roller bearing performance up to 250 °C *(480 °F)*

VA237 is the optimal choice for spherical roller bearings in high temperature applications. These bearings are filled with a patented, solid-graphite lubricant with high-speed additives. Use of a VA237 high temperature spherical roller bearing with C4 radial internal clearance enables a maximum operating temperature of 250 °C *(480 °F)*.

Table 3

Characteristics of high temperature variants for spherical roller bearings

Characteristic	Variant VA237	VA210
Lubrication type	Patented solid graphite lubricant with high-speed additives	Solid graphite lubricant
Phosphated rings, rolling elements and cages	no	no
NSF H1 food grade	no	yes
Shields	no	no
Relubrication free	yes	yes
Maximum operating temperature	250 °C *(480 °F)* for bearings with C4 radial clearance 200 °C *(390 °F)* for bearings with C3 radial clearance	250 °C *(480 °F)* for bearings with C4 radial clearance 200 °C *(390 °F)* for bearings with C3 radial clearance
Limiting speed [r/min][1)]	48 000/d_m for bearings with C4 radial clearance 60 000/d_m for bearings with C3 radial clearance	6 000/d_m for bearings with C4 radial clearance 7 500/d_m for bearings with C3 radial clearance

[1)] d_m = bearing mean diameter = 0,5 (d + D). For outer ring rotation, use d_m = D.

Lubrication and running in

Relubrication

All SKF high temperature deep groove ball bearings are lubricated for the life of the bearing, except for open VA201 bearings, which require relubrication.

The general recommendation for an open VA201 bearing is to investigate the quality of the lubricating paste in the bearing every six months. If there is no longer a film of dry lubricant on the raceways, indicated by a bright metallic shiny track, remove residues of the old lubricant with a solvent and, when dried, replenish the bearing with lubricating paste.

Apply the paste in a thin layer. The paste should be evenly distributed around the entire raceways of the bearing, which can be done using a brush of medium hardness. It is important to rotate the bearing when it has been replenished with paste. Any collars of excess paste should be removed.

Running in

Following installation or relubrication, VA201 bearings operating at bearing temperatures below 200 °C *(660 °F)*, while running at speeds below 25% of the limiting speed require running in.

Running in requires that the bearing be run at a temperature of at least 200 °C *(660 °F)* for a minimum of 48 hours.

Loads and selecting bearing size

There are two methods of determining the required bearing size:

- selecting bearing size for operating conditions
- selecting bearing size for dynamic operating conditions

For variants VA201, VA208 and VA228, use the method of selecting bearing size for static operating conditions.

For variants VA237 and VA267, the appropriate method depends on the operating conditions. If the bearing operates under any of the following:

- very low speeds (n < 10 r/min)
- very slow oscillating movements
- stationary under load for long periods of time

then use the method of selecting bearing size for static operating conditions.

Otherwise, use the method of selecting bearing size for dynamic operating conditions.

Selecting bearing size for static operating conditions

The bearing size is selected based on the basic static load rating C_0. Basic static load ratings for bearings are listed in the product tables.

For an equivalent static bearing load P_0, the selected bearing must have a C_0 value ≥ the value of requisite basic static load rating C_{0req} specified in **table 4**.

NOTE: **Table 4** is valid for high temperature deep groove ball bearings and Y-bearings and Y-bearings units only when $P_0 = F_r$. That is, when:

$$F_a < 0{,}8\ F_r$$

and

$$F_a < 0{,}15\ C_0$$

where
P_0 = equivalent static bearing load [kN]
F_a = axial load [kN]
F_r = radial load [kN]
C_0 = basic static load rating [kN]

Table 4 is valid for high temperature spherical roller bearings only when:

$$P_0 = F_r + Y_0\ F_a$$

where
P_0 = equivalent static bearing load [kN]
F_r = radial load [kN]
Y_0 = calculation factor (→ **product tables**)
F_a = axial load [kN]

Table 4

Requisite basic static load rating for applied equivalent static bearing load

Equivalent static bearing load P_0	Requisite basic static load rating C_{0req} for operating temperatures up to	
	250 °C *(480 °F)*	350 °C *(660 °F)*
kN	kN	kN
2	6	9
4	11	18
6	16	27
8	22	36
10	27	45
15	40	67
20	54	90
25	67	120
30	80	140
40	110	180
50	140	230
60	160	270
70	190	320
80	220	360
90	240	400
100	270	450
125	340	560
150	400	670
200	540	890
300	800	1 400
400	1 100	1 800
500	1 400	2 300
600	1 600	–

Selecting bearing size for dynamic operating conditions

The bearing size is selected[1] based on the basic dynamic load rating C. Basic dynamic load ratings are listed in the product tables.

The type of operation must be identified as either:

- intermittent (that is, standing still or used for short periods of time)
- continuous (machinery utilized 8 hours, or more, per day)

For an equivalent dynamic bearing load P, the selected bearing must have a C value ≥ the value of the requisite basic dynamic load rating C_{req} specified in **table 5** (for intermittent) or **table 6** (for continuous operation).

NOTE: Table 5 and **table 6** are valid for high temperature deep groove ball bearings and Y-bearings and Y-bearing units only when P = F_r. That is:

$F_a < 0{,}3\ F_r$

and

$F_a < 0{,}15\ C_0$

where
P = equivalent dynamic bearing load [kN]
F_r = radial load [kN]
F_a = axial load [kN]
C_0 = basic static load rating [kN]

Table 5 and **table 6** are valid for high temperature spherical roller bearings only when:

$F_a/F_r \leq e \rightarrow P = F_r + Y_1\ F_a$

where
F_a = axial load [kN]
F_r = radial load [kN]
e = calculation factor (→ **product tables**)
P = equivalent dynamic bearing load [kN]
Y_1 = calculation factor (→ **product tables**)

[1] Although the process described here for selecting bearing size for dynamic operating conditions is based on ISO 281:2007 basic dynamic load rating (C) for an equivalent-size standard bearing and calculated equivalent load (P), this selection process is not according to ISO 281 and is not a calculated rating life based on sub-surface fatigue as the failure criteria.

Table 5

Requisite dynamic load rating for applied radial loads for intermittent operation

Bearing radial load F_r	Requisite dynamic load rating C_{req} for operating temperatures up to	
	250 °C *(480 °F)*	350 °C *(660 °F)*
kN	kN	kN
2	14	22
4	27	45
6	40	67
8	54	89
10	67	120
15	100	170
20	140	230
25	170	280
30	200	340
40	270	450
50	340	560
60	400	670
70	470	780
80	540	890
90	600	1 000
100	670	1 120
125	840	1 390
150	1 000	1 670
200	1 340	2 230
300	2 000	–
400	–	–
500	–	–
600	–	–

Table 6

Requisite dynamic load rating for applied radial loads for continuous operation

Bearing radial load F_r	Requisite dynamic load rating C_{req} for operating temperatures up to	
	250 °C *(480 °F)*	350 °C *(660 °F)*
kN	kN	kN
2	27	45
4	53	90
6	80	140
8	110	180
10	140	230
15	200	340
20	270	450
25	340	560
30	400	670
40	540	890
50	670	1 120
60	800	1 340
70	940	1 560
80	1 070	1 780
90	1 200	2 000
100	1 340	2 230
125	1 670	–
150	2 000	–
200	–	–
300	–	–
400	–	–
500	–	–
600	–	–

Design of bearing arrangements

Location of bearings

The selection of shaft and housing fits for high temperature deep groove ball bearings and spherical roller bearings depends on the bearing operating condition and bearing size. An appropriate fit is needed to locate the shaft, provide satisfactory support, allow for thermal expansion and reach the stated maximum operating bearing temperature (→ **table 7 and 8**).

For moderate loads (0,035 C < P ≤ 0,05 C), the shaft seats for Y bearings should be machined to a h7Ⓔ tolerance. For light loads and low speeds, a h8Ⓔ shaft tolerance is sufficient.

All ISO tolerance classes are valid with the envelope requirement in accordance with ISO 14405-1:2010.

Mounting

SKF high temperature Y-bearings and Y-bearing units have a clearance fit for the recommended shaft diameters. They can therefore be slid into position and secured with the grub (set) screws on the inner ring.

SKF high temperature bearings (except high temperature Y-bearings and Y-bearing units) should always be hot mounted to reduce the mounting force and the risk of cracking the graphite lubricant. Induction heater is the preferred choice to heat the bearing during mounting.

Submerging the SKF high temperature bearings in hot oil is not recommended since the oil remaining in the bearing might carbonize later during operation. Do not use impact mounting methods such as hammer or bearing fitters because the impacts can make the graphite lubricant crack.

The drive-up data in **table 9**, **page 28**, is applicable when mounting high temperature spherical roller bearings on a tapered shaft, an adapter sleeve or a withdrawal sleeve. The drive-up data in the table has been adjusted, compared to the standard drive-up data, to handle the high operating temperatures.

During drive up, do not use mounting oil. The oil will enter the bearing and, at higher temperatures, will carbonize and reduce bearing service life.

When dismounting the bearing, dismounting oil can be used if the bearing will not be put in operation again.

Table 7

Fits for high temperature deep groove ball bearings on solid steel shafts or in cast iron and steel housings

Conditions	Shaft diameter	Shaft tolerance	Housing tolerance
–	mm	–	–
Rotating inner ring load	all	k6Ⓔ	F7Ⓔ
Stationary inner ring load	all	g6Ⓔ	J7Ⓔ

Table 8

Fits for high temperature spherical roller bearings on solid steel shafts or in cast iron and steel housings

Conditions	Shaft diameter	Shaft tolerance	Housing tolerance
–	mm	–	–
Rotating inner ring load	< 25	k5Ⓔ	F7Ⓔ
	25 to 40	m5Ⓔ	F7Ⓔ
	>40 to 60	n5Ⓔ	F7Ⓔ
	>60	n6Ⓔ	F7Ⓔ
Stationary inner ring load	all	g6Ⓔ	J7Ⓔ

Drive-up data for high temperature spherical roller bearings with a tapered bore

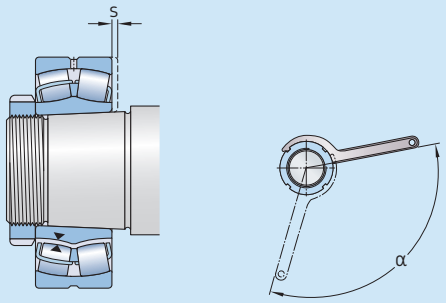

Bore diameter d		Reduction of radial internal clearance		Axial drive-up[1) 2)] s				Lock nut tightening angle[2)]
				Taper 1:12		Taper 1:30		Taper 1:12 α
over	incl.	min.	max.	min.	max.	min.	max.	
mm		mm		mm				°
24	**30**	0,005	0,010	0,21	0,25	–	–	80
30	**40**	0,010	0,015	0,27	0,30	–	–	90
40	**50**	0,015	0,020	0,23	0,30	–	–	100
50	**65**	0,015	0,025	0,25	0,34	0,65	0,85	80
65	**80**	0,025	0,030	0,35	0,45	0,80	1,05	100
80	**100**	0,025	0,035	0,40	0,53	0,90	1,25	120
100	**120**	0,030	0,040	0,40	0,56	1,10	1,45	
120	**140**	0,035	0,050	0,66	0,83	1,55	2,05	
140	**160**	0,040	0,055	0,65	0,90	1,70	2,25	
160	**180**	0,045	0,060	0,73	0,98	1,80	2,40	
180	**200**	0,055	0,070	0,75	1,05	1,95	2,65	
200	**225**	0,055	0,075	0,85	1,20	2,25	3,00	
225	**250**	0,065	0,085	0,93	1,28	2,30	3,15	
250	**280**	0,060	0,090	1,08	1,43	2,65	3,55	
280	**315**	0,070	0,100	1,10	1,50	2,70	3,75	
315	**355**	0,085	0,115	1,30	1,80	3,30	4,50	
355	**400**	0,090	0,130	1,45	1,95	3,50	4,90	
400	**450**	0,110	0,150	1,73	2,33	4,30	5,80	
450	**500**	0,110	0,160	1,78	2,48	4,45	6,15	
500	**560**	0,125	0,180	2,08	2,78	5,00	6,90	

For normal to heavy loads, and higher, (i.e. P ≤ 0,1C), applying the recommended values prevents the inner ring from creeping, but does not ensure correct radial internal clearance in operation. Additional influences from the bearing housing fit and temperature differences between the inner ring and outer rings must be considered carefully when selecting the bearing radial internal clearance class. For additional information, contact the SKF application engineering service.
For all other load conditions, contact the SKF application engineering service.

[1)] Not valid for the SKF Drive-up method
[2)] The listed values are to be used as guideline values only, as it is difficult to establish an exact starting position. Also, the axial drive-up s differs slightly between the different bearings series

Operating environment

Since all high temperature bearings are supplied without preservative oils and must be used without grease or oil lubrication, the anti-corrosion property of the bearings is limited. Therefore, the bearings should be used in a dry environment or with a proper sealing arrangement to keep the bearings dry.

The most common sealing alternatives for high temperature deep groove ball bearings incorporate integral or external shields or labyrinth seals. These arrangements have a rather low complexity and none of these arrangements are capable of keeping the bearing dry in a wet environment.

Sealing solutions

High temperature deep groove ball bearings can be protected from contaminants by either integral shields, external shields or a combination of both.

For high temperature bearings, metallic shields are the primary recommendation when a capping device with low complexity is required. Shields prevent the ingress of solid contaminants into the bearing. They are non-contact, generate almost no friction and do not wear. Due to the material and design, they are particularly well suited for high temperatures.

High temperature deep groove ball bearings with designation suffix 2Z have integrated shields, but the VA201 variant is also available as an open bearing (→ **fig. 2**). The shields on a 2Z/VA201 bearing enable the bearing to be filled with twice the amount of polyalkylene glycol/graphite lubricant that is used in an open VA201 bearing.

The capping device on high temperature Y-bearings (designation suffix 2F) consists of a shield and a flinger that create a narrow gap labyrinth seal (→ **fig. 1**).

Fig. 1

High temperature Y-bearings with integrated shields and flingers (2FW)

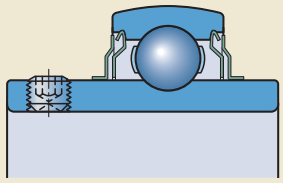

2FW/VA201

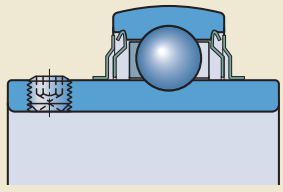

2FW/VA228

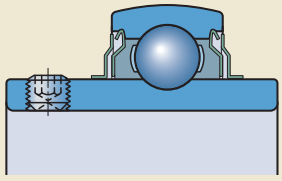

2FW/VA267

Fig. 2

High temperature deep groove ball bearings and integrated shields (2Z)

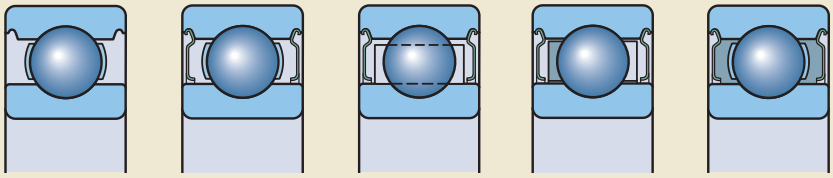

VA201 | 2Z/VA201 | 2Z/VA208 | 2Z/VA228 | 2Z/VA267 2Z/C4VA237

In many cases, the integral shields are sufficient to keep contaminants out of the bearing. However, in some cases, the integrated shields are insufficient, and so additional external shields should be considered – either Nilos rings (→ **fig. 3**), SKF sealing washers (→ **fig. 4**) or custom made seals.

Integral shields are not available for spherical roller bearings, so external shields should be considered – either Nilos rings (→ **fig. 5**), SKF sealing washers (→ **fig. 6**) or custom made seals. Make sure that the selected sealing solution can accommodate any misalignment that may occur in the bearing arrangement.

Fig. 3

Sealing solution using Nilos rings

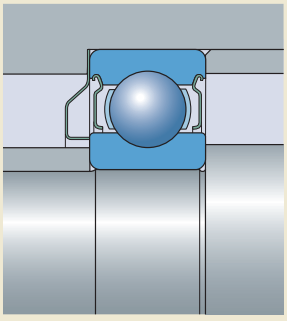

Fig. 4

Sealing solution using SKF sealing washers

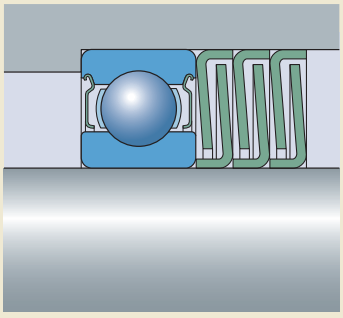

Example showing bearing 6205-2Z/VA267 and triple sealing washers Z 205

Fig. 5

Sealing solution using Nilos rings

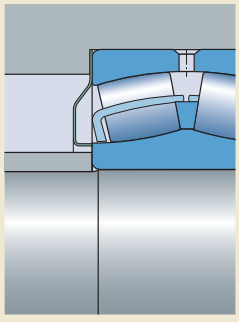

Fig. 6

Sealing solution using SKF sealing washers

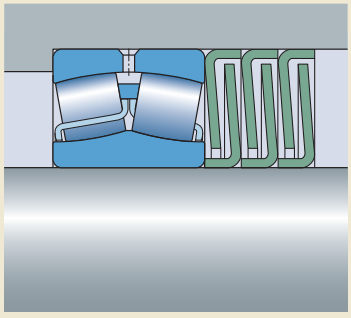

Example showing bearing 22214 E/C4VA237 and triple sealing washers Z 214

Custom made seals

In cases where none of the sealing options above are applicable, SKF can provide custom made seals for operating temperatures up to 250 °C *(480 °F)*. These seals are typically manufactured from PTFE (Polytetrafluoro-ethylene) thermoplastics.

Examples of use include:

- replacements for seals in a plummer block housing
- replacements for seals in an existing sealing arrangement

WARNING

PTFE seals exposed to an open flame or temperatures above 300 °C *(570 °F)* are a health and environmental hazard! They remain dangerous even after they have cooled.

Read and follow the safety precautions for seals in the SKF rolling bearing catalogue.

To further improve sealing systems that incorporate custom made seals, it is preferable to use a wear sleeve such as the SKF Speedi-Sleeve. This improves the seal counter surface condition without the need for re-machining. Contact SKF for more information.

Thermal axial expansion of shaft

To accommodate thermal axial expansion of the shaft in Y-bearing unit arrangements, the shaft on the non-locating side should be provided with either one, or two grooves located 120° apart, to engage with modified grub screws:

- Hexagon socket grub (set) screws with a dog point, in accordance with ISO 4028:2003, but with a fine thread according to **table 10**. The grub screw should be secured by a nut and spring washer or star lock washer (→ **fig. 7**).
- Slotted pan head screws in accordance with ISO 1580:2011, but with fine thread according to table 2, locked with a spring or star lock washer (→ **fig. 8**).

Fig. 7

Hexagonal socket grub screw with a dog point secured by a nut and spring washer

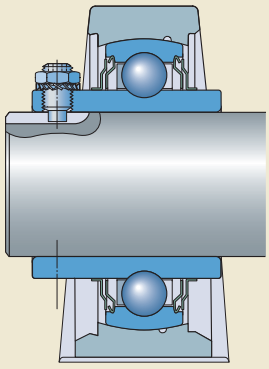

Fig. 8

Slotted pan head screw secured by a spring washer

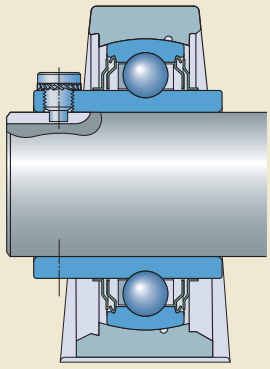

Table 10

Grub screw hexagonal socket dimensions and tightening torques

Bearing bore		Threaded holes	Hexagonal key size	Tightening torque
over	incl.			
mm/in.	kN	kN	mm/in.	Nm
For metric shaft				
	35	M 6 x 0,75	3	4
35	**45**	M 8 x 1	4	6,5
45	**65**	M 10 x 1	5	16,5
65	**75**	M 10 x 1	6	28,5
For inch shaft				
	1 3/16	5/6 – 24 UNF	1/8	4
1 3/16	**1 3/4**	5/6 – 24 UNF	5/32	6,5
1 3/4	**2 7/16**	3/8 – 24 UNF	3/16	16,5
2 7/16	**2 15/16**	7/16 – 20 UNF	7/32	28,5

The screws and groove(s) accommodate changes in shaft length and prevent the shaft from turning independently of the bearing inner ring. The ends of the grub screws should be ground and the sliding surfaces in the shaft grooves coated with a lubricant paste suitable for the operating temperature.

Bearing data

	Deep groove ball bearings	Y-bearings	Y-bearing units	Spherical roller bearings
Dimension standards	Boundary dimensions: ISO 15:2011 Series 10, 02, 03	Boundary dimensions: ISO 9628:2006	Boundary dimensions: ISO 3328:1993	Boundary dimensions: ISO 15:2011
Tolerances	Normal Values: ISO 492:2002	Normal, except the bore and outside diameter (→ **table 12**) Values: ISO 492:2002	Housing bore has an increased sphere diameter appropriate for high temperature applications.	Refer to bearing data for standard spherical roller bearings.
	Due to the special surface treatment of the bearings and the y-bearing housings, there may be slight deviations from the standard tolerances. These deviations do not affect mounting or bearing operation.			
Radial internal clearance	Multiples of C5, except for VA237 which is C4 as standard.	Multiples of C5 –		C4 as standard. Available in C3 on request.
	Values (**table 11**) are valid for unmounted bearings under zero measuring load.			Values are the same as for relevant standard bearing
Misalignment	≈ 20 to 30 minutes of arc		≈ 20 to 30 minutes of arc Initial misalignment ≤ 5°	Refer to bearing data for standard spherical roller bearings.
	The above values apply only when the bearings rotate slowly. The permissible angular misalignment between the inner and outer ring depends on the size and internal design of the bearing, radial internal clearance in operation and the forces and moments acting on the bearing. As a result, only approximate values are listed here. Any misalignment increases bearing noise and reduces bearing service life.			
Stabilization	120 °C *(250 °F)*	120 °C *(250 °F)*		200 °C *(390 °F)*
	The rings, rolling elements and cages of SKF high temperature bearings and housings of SKF Y-bearing units undergo the same heat stabilization process as the relevant standard bearing. As a result, for higher operating temperatures, a certain amount of dimensional change is to be expected. For additional information, contact the SKF application engineering service.			

Table 11

Radial internal clearance for high temperature bearings

Bore diameter d		Radial internal clearance Deep grove ball bearings Multiples of C5		Y-bearings	
over	incl.	min.	max.	min.	max.
mm		µm			
	10	96	136	–	–
10	**18**	112	160	–	–
18	**24**	124	172	56	96
24	**30**	136	192	60	106
30	**40**	172	236	80	128
40	**50**	192	272	90	146
50	**65**	230	340	110	180
65	**80**	270	400	–	–
80	**100**	320	460	–	–
100	**120**	370	540	–	–

Table 12

Tolerances of Y-bearings for high temperature application

Nominal diameter d, D		Bore diameter[1)] Deviation		Outside diameter Deviation	
over	incl.	high	low	high	low
mm		µm		µm	
18	**30**	+18	0	–	–
30	**50**	+21	0	0	–10
50	**80**	+24	0	0	–10
80	**120**	+28	0	0	–10

[1)] Values in accordance with ISO 9628:2006

WARNING

Safety precautions for bearings with PFPE based oil additives (suffixes VA237 and VA267). PFPE oil is very stable and harmless under normal operating conditions up to +250 °C *(480 °F)*. However, if exposed to extreme temperatures such as those above 300 °C *(570 °F)*, PFPE oils give off hazardous fumes . These fumes can be harmful to the eyes and to the lungs, if inhaled. The following safety precautions should be observed:

- Follow the safety precautions in the appropriate material safety data sheet (MSDS).
- If there is a risk of human exposure and the bearing operating temperature is above 300 °C, appropriate ventilation is required.
- If the fumes have been inhaled, consult a doctor immediately.

The user is responsible for the correct use of the product during its service life and its proper disposal. SKF takes no responsibility for the improper handling of bearings with PFPE oil additives or for any injury resulting from their use .

Deep groove ball bearings for high temperature applications

d **12 – 35** mm

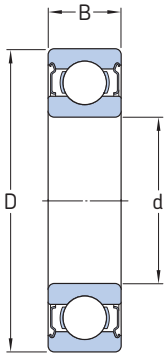

2Z/VA201

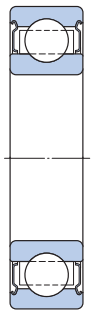

2Z/VA208

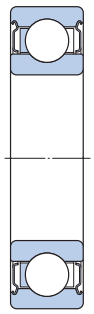

2Z/VA228

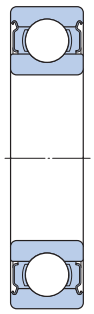

2Z/C4VA237
2Z/VA267

Principal dimensions			Basic load ratings dynamic	static	Limiting speed	Limiting temperature		Running in required	Mass	Designations
d	D	B	C	C_0						
mm			kN		r/min	°C	*°F*	–	kg	–
12	32	10	7,28	3,1	200	250	*480*	•	0,039	**6201-2Z/VA201**
	32	10	7,28	3,1	400	350	*660*	–	0,039	**6201-2Z/VA228**
	32	10	7,28	3,1	4 360	150	*300*	–	0,04	**6201-2Z/C4VA237**[1)]
	32	10	7,28	3,1	2 720	250	*480*	–	0,04	**6201-2Z/VA267**
	37	12	10,1	4,15	3 910	150	*300*	–	0,065	**6301-2Z/C4VA237**[1)]
15	35	11	8,06	3,75	180	250	*480*	•	0,048	**6202-2Z/VA201**
	35	11	8,06	3,75	360	350	*660*	–	0,048	**6202-2Z/VA228**
	35	11	8,06	3,75	3 840	150	*300*	–	0,049	**6202-2Z/C4VA237**
	35	11	8,06	3,75	2 400	250	*480*	–	0,049	**6202-2Z/VA267**
	42	13	11,9	5,4	3 360	150	*300*	–	0,089	**6302-2Z/C4VA237**
17	35	10	6,37	3,25	170	250	*480*	•	0,041	**6003-2Z/VA201**
	35	10	6,37	3,25	170	350	*660*	–	0,041	**6003-2Z/VA208**
	35	10	6,37	3,25	2 300	250	*480*	–	0,042	**6003-2Z/VA267**
	40	12	9,95	4,75	150	250	*480*	•	0,068	**6203-2Z/VA201**
	40	12	9,95	4,75	310	350	*660*	–	0,068	**6203-2Z/VA228**
	40	12	9,95	4,75	3 360	150	*300*	–	0,07	**6203-2Z/C4VA237**
	40	12	9,95	4,75	2 100	250	*480*	–	0,07	**6203-2Z/VA267**
	47	14	14,3	6,55	280	350	*660*	–	0,12	**6303-2Z/VA228**
	47	14	14,3	6,55	3 000	150	*300*	–	0,12	**6303-2Z/C4VA237**[1)]
	47	14	14,3	6,55	1 870	250	*480*	–	0,12	**6303-2Z/VA267**
20	42	12	9,95	5	140	250	*480*	•	0,071	**6004-2Z/VA201**
	42	12	9,95	5	140	350	*660*	–	0,071	**6004-2Z/VA208**
	42	12	9,95	5	1 930	250	*480*	–	0,073	**6004-2Z/VA267**
	47	14	13,5	6,55	130	250	*480*	•	0,11	**6204-2Z/VA201**
	47	14	13,5	6,55	260	350	*660*	–	0,11	**6204-2Z/VA228**
	47	14	13,5	6,55	2 860	150	*300*	–	0,11	**6204-2Z/C4VA237**
	47	14	13,5	6,55	1 790	250	*480*	–	0,11	**6204-2Z/VA267**
	52	15	16,8	7,8	120	250	*480*	•	0,15	**6304-2Z/VA201**
	52	15	16,8	7,8	120	350	*660*	–	0,15	**6304-2Z/VA208**
	52	15	16,8	7,8	250	350	*660*	–	0,15	**6304-2Z/VA228**
	52	15	16,8	7,8	2 660	150	*300*	–	0,15	**6304-2Z/C4VA237**
	52	15	16,8	7,8	1 660	250	*480*	–	0,15	**6304-2Z/VA267**

[1)] Check availability prior to incorporating in a bearing arrangement design.

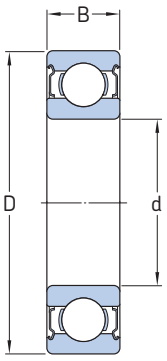

2Z/VA201

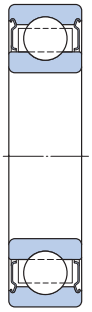

2Z/VA208

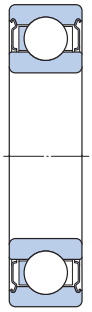

2Z/VA228

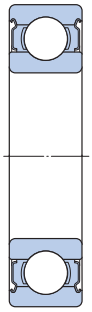

2Z/C4VA237
2Z/VA267

Principal dimensions			Basic load ratings dynamic	static	Limiting speed	Limiting temperature		Running in required	Mass	Designations
d	D	B	C	C_0						
mm			kN		r/min	°C	*°F*	–	kg	–
25	47	12	11,9	6,55	120	250	*480*	•	0,083	**6005-2Z/VA201**
	47	12	11,9	6,55	120	350	*660*	–	0,083	**6005-2Z/VA208**
	47	12	11,9	6,55	1 660	250	*480*	–	0,085	**6005-2Z/VA267**
	52	15	14,8	7,8	110	250	*480*	•	0,13	**6205-2Z/VA201**
	52	15	14,8	7,8	110	350	*660*	–	0,13	**6205-2Z/VA208**
	52	15	14,8	7,8	230	350	*660*	–	0,13	**6205-2Z/VA228**
	52	15	14,8	7,8	2 490	150	*300*	–	0,14	**6205-2Z/C4VA237**
	52	15	14,8	7,8	1 550	250	*480*	–	0,14	**6205-2Z/VA267**
	62	17	23,4	11,6	100	250	*480*	→	0,23	**6305-2Z/VA201**
	62	17	23,4	11,6	100	350	*660*	–	0,23	**6305-2Z/VA208**
	62	17	23,4	11,6	200	350	*660*	–	0,23	**6305-2Z/VA228**
	62	17	23,4	11,6	2 200	150	*300*	–	0,24	**6305-2Z/C4VA237**
	62	17	23,4	11,6	1 370	250	*480*	–	0,24	**6305-2Z/VA267**
30	55	13	13,8	8,3	100	350	*660*	–	0,12	**6006-2Z/VA208**
	55	13	13,8	8,3	1 410	250	*480*	–	0,13	**6006-2Z/VA267**
	62	16	20,3	11,2	90	250	*480*	→	0,21	**6206-2Z/VA201**
	62	16	20,3	11,2	90	350	*660*	–	0,21	**6206-2Z/VA208**
	62	16	20,3	11,2	190	350	*660*	–	0,21	**6206-2Z/VA228**
	62	16	20,3	11,2	2 080	150	*300*	–	0,21	**6206-2Z/C4VA237**
	62	16	20,3	11,2	1 300	250	*480*	–	0,21	**6206-2Z/VA267**
	72	19	29,6	16	80	350	*660*	–	0,36	**6306-2Z/VA208**
	72	19	29,6	16	170	350	*660*	–	0,36	**6306-2Z/VA228**
	72	19	29,6	16	1 880	150	*300*	–	0,37	**6306-2Z/C4VA237**[1)]
	72	19	29,6	16	1 170	250	*480*	–	0,37	**6306-2Z/VA267**
35	72	17	27	15,3	80	250	*480*	→	0,3	**6207-2Z/VA201**
	72	17	27	15,3	80	350	*660*	–	0,3	**6207-2Z/VA208**
	72	17	27	15,3	160	350	*660*	–	0,3	**6207-2Z/VA228**
	72	17	27	15,3	1 790	150	*300*	–	0,31	**6207-2Z/C4VA237**[1)]
	72	17	27	15,3	1 120	250	*480*	–	0,31	**6207-2Z/VA267**
	80	21	35,1	19	70	350	*660*	–	0,48	**6307-2Z/VA208**
	80	21	35,1	19	1 660	150	*300*	–	0,49	**6307-2Z/C4VA237**[1)]
	80	21	35,1	19	1 040	250	*480*	–	0,49	**6307-2Z/VA267**

[1)] Check availability prior to incorporating in a bearing arrangement design.

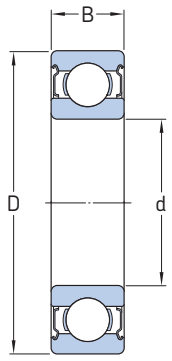

2Z/VA201

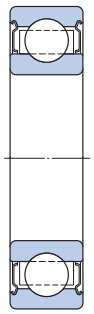

2Z/VA208

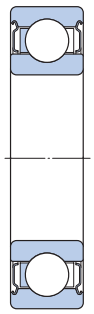

2Z/VA228

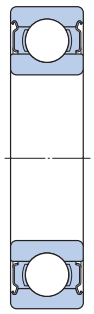

2Z/C4VA237
2Z/VA267

Principal dimensions			Basic load ratings dynamic	static	Limiting speed	Limiting temperature		Running in required	Mass	Designations
d	D	B	C	C_0						
mm			kN		r/min	°C	*°F*	–	kg	–
40	68	15	17,8	11	80	350	*660*	–	0,2	**6008-2Z/VA208**
	68	15	17,8	11	1 110	250	*480*	–	0,21	**6008-2Z/VA267**
	80	18	32,5	19	70	250	*480*	→	0,38	**6208-2Z/VA201**
	80	18	32,5	19	70	350	*660*	–	0,38	**6208-2Z/VA208**
	80	18	32,5	19	150	350	*660*	–	0,38	**6208-2Z/VA228**
	80	18	32,5	19	1 600	150	*300*	–	0,39	**6208-2Z/C4VA237**
	80	18	32,5	19	1 000	250	*480*	–	0,39	**6208-2Z/VA267**
	90	23	42,3	24	60	250	*480*	•	0,65	**6308-2Z/VA201**
	90	23	42,3	24	60	350	*660*	–	0,65	**6308-2Z/VA208**
	90	23	42,3	24	130	350	*660*	–	0,65	**6308-2Z/VA228**
	90	23	42,3	24	1 470	150	*300*	–	0,67	**6308-2Z/C4VA237**
	90	23	42,3	24	920	250	*480*	–	0,67	**6308-2Z/VA267**
45	85	19	35,1	21,6	60	250	*480*	•	0,43	**6209-2Z/VA201**
	85	19	35,1	21,6	60	350	*660*	–	0,43	**6209-2Z/VA208**
	85	19	35,1	21,6	130	350	*660*	–	0,43	**6209-2Z/VA228**
	85	19	35,1	21,6	1 470	150	*300*	–	0,45	**6209-2Z/C4VA237**[1)]
	85	19	35,1	21,6	920	250	*480*	–	0,45	**6209-2Z/VA267**
	100	25	55,3	31,5	60	350	*660*	–	0,87	**6309-2Z/VA208**
	100	25	55,3	31,5	1 320	150	*300*	–	0,89	**6309-2Z/C4VA237**[1)]
	100	25	55,3	31,5	820	250	*480*	–	0,89	**6309-2Z/VA267**
50	80	16	22,9	15,6	60	350	*660*	–	0,27	**6010-2Z/VA208**
	80	16	22,9	15,6	920	250	*480*	–	0,28	**6010-2Z/VA267**
	90	20	37,1	23,2	60	250	*480*	•	0,47	**6210-2Z/VA201**
	90	20	37,1	23,2	60	350	*660*	–	0,47	**6210-2Z/VA208**
	90	20	37,1	23,2	120	350	*660*	–	0,47	**6210-2Z/VA228**
	90	20	37,1	23,2	1 370	150	*300*	–	0,49	**6210-2Z/C4VA237**
	90	20	37,1	23,2	850	250	*480*	–	0,49	**6210-2Z/VA267**
	110	27	65	38	50	250	*480*	•	1,1	**6310-2Z/VA201**
	110	27	65	38	50	350	*660*	–	1,1	**6310-2Z/VA208**
	110	27	65	38	110	350	*660*	–	1,1	**6310-2Z/VA228**
	110	27	65	38	1 200	150	*300*	–	1,15	**6310-2Z/C4VA237**[1)]
	110	27	65	38	750	250	*480*	–	1,15	**6310-2Z/VA267**

[1)] Check availability prior to incorporating in a bearing arrangement design.

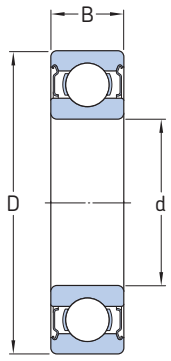

2Z/VA201

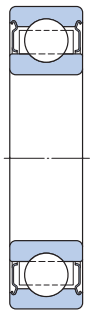

2Z/VA208

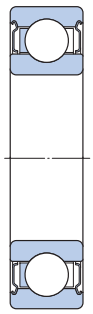

2Z/VA228

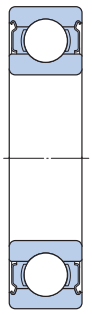

2Z/C4VA237
2Z/VA267

Principal dimensions			Basic load ratings dynamic	static	Limiting speed	Limiting temperature		Running in required	Mass	Designations
d	D	B	C	C_0						
mm			kN		r/min	°C	°F	–	kg	–
55	90	18	29,6	21,2	60	350	*660*	–	0,4	**6011-2Z/VA208**
	90	18	29,6	21,2	820	250	*480*	–	0,41	**6011-2Z/VA267**
	100	21	46,2	29	50	250	*480*	•	0,64	**6211-2Z/VA201**
	100	21	46,2	29	50	350	*660*	–	0,64	**6211-2Z/VA208**
	100	21	46,2	29	110	350	*660*	–	0,64	**6211-2Z/VA228**
	100	21	46,2	29	1 230	150	*300*	–	0,66	**6211-2Z/C4VA237**[1)]
	100	21	46,2	29	770	250	*480*	–	0,66	**6211-2Z/VA267**
	120	29	74,1	45	50	250	*480*	•	1,4	**6311-2Z/VA201**
	120	29	74,1	45	50	350	*660*	–	1,4	**6311-2Z/VA208**
	120	29	74,1	45	100	350	*660*	–	1,4	**6311-2Z/VA228**
	120	29	74,1	45	1 090	150	*300*	–	1,45	**6311-2Z/C4VA237**[1)]
	120	29	74,1	45	680	250	*480*	–	1,45	**6311-2Z/VA267**
60	110	22	55,3	36	50	250	*480*	•	0,81	**6212-2Z/VA201**
	110	22	55,3	36	50	350	*660*	–	0,81	**6212-2Z/VA208**
	110	22	55,3	36	100	350	*660*	–	0,81	**6212-2Z/VA228**
	110	22	55,3	36	1 120	150	*300*	–	0,84	**6212-2Z/C4VA237**
	110	22	55,3	36	700	250	*480*	–	0,84	**6212-2Z/VA267**
	130	31	85,2	52	40	350	*660*	–	1,8	**6312-2Z/VA208**
	130	31	85,2	52	90	350	*660*	–	1,8	**6312-2Z/VA228**
	130	31	85,2	52	1 010	150	*300*	–	1,85	**6312-2Z/C4VA237**
	130	31	85,2	52	630	250	*480*	–	1,85	**6312-2Z/VA267**
65	120	23	58,5	40,5	40	250	*480*	•	1,05	**6213-2Z/VA201**
	120	23	58,5	40,5	40	350	*660*	–	1,05	**6213-2Z/VA208**
	120	23	58,5	40,5	90	350	*660*	–	1,05	**6213-2Z/VA228**
	120	23	58,5	40,5	1 030	150	*300*	–	1,1	**6213-2Z/C4VA237**
	120	23	58,5	40,5	640	250	*480*	–	1,1	**6213-2Z/VA267**
	140	33	97,5	60	40	250	*480*	•	2,2	**6313-2Z/VA201**
	140	33	97,5	60	40	350	*660*	–	2,2	**6313-2Z/VA208**
	140	33	97,5	60	80	350	*660*	–	2,2	**6313-2Z/VA228**
	140	33	97,5	60	930	150	*300*	–	2,25	**6313-2Z/C4VA237**[1)]
	140	33	97,5	60	580	250	*480*	–	2,25	**6313-2Z/VA267**

[1)] Check availability prior to incorporating in a bearing arrangement design.

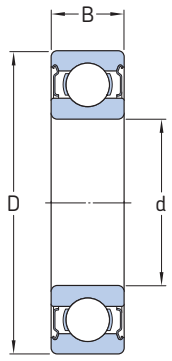

2Z/VA201

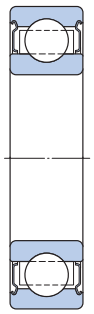

2Z/VA208

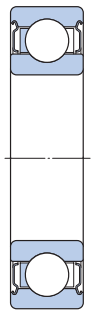

2Z/VA228

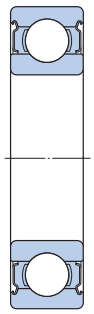

2Z/C4VA237
2Z/VA267

Principal dimensions			Basic load ratings dynamic	static	Limiting speed	Limiting temperature		Running in required	Mass	Designations
d	D	B	C	C_0						
mm			kN		r/min	°C	*°F*	–	kg	–
70	125	24	63,7	45	40	250	*480*	•	1,15	**6214-2Z/VA201**
	125	24	63,7	45	40	350	*660*	–	1,15	**6214-2Z/VA208**
	125	24	63,7	45	90	350	*660*	–	1,15	**6214-2Z/VA228**
	125	24	63,7	45	980	150	*300*	–	1,15	**6214-2Z/C4VA237**
	125	24	63,7	45	610	250	*480*	–	1,15	**6214-2Z/VA267**
	150	35	111	68	40	350	*660*	–	2,65	**6314-2Z/VA208**
	150	35	111	68	870	150	*300*	–	2,7	**6314-2Z/C4VA237**
	150	35	111	68	540	250	*480*	–	2,7	**6314-2Z/VA267**
75	130	25	68,9	49	40	250	*480*	•	1,25	**6215-2Z/VA201**
	130	25	68,9	49	40	350	*660*	–	1,25	**6215-2Z/VA208**
	130	25	68,9	49	80	350	*660*	–	1,25	**6215-2Z/VA228**
	130	25	68,9	49	930	150	*300*	–	1,25	**6215-2Z/C4VA237**
	130	25	68,9	49	580	250	*480*	–	1,25	**6215-2Z/VA267**
	160	37	119	76,5	30	350	*660*	–	3,15	**6315-2Z/VA208**
	160	37	119	76,5	810	150	*300*	–	3,25	**6315-2Z/C4VA237**
	160	37	119	76,5	510	250	*480*	–	3,25	**6315-2Z/VA267**
80	140	26	72,8	55	40	350	*660*	–	1,55	**6216-2Z/VA208**
	140	26	72,8	55	870	150	*300*	–	1,55	**6216-2Z/C4VA237**
	140	26	72,8	55	540	250	*480*	–	1,55	**6216-2Z/VA267**
	170	39	130	86,5	30	350	*660*	–	3,75	**6316-2Z/VA208**
	170	39	130	86,5	760	150	*300*	–	3,85	**6316-2Z/C4VA237**[1)]
	170	39	130	86,5	480	250	*480*	–	3,85	**6316-2Z/VA267**
85	150	28	87,1	64	30	350	*660*	–	1,9	**6217-2Z/VA208**
	150	28	87,1	64	810	150	*300*	–	1,95	**6217-2Z/C4VA237**[1)]
	150	28	87,1	64	510	250	*480*	–	1,95	**6217-2Z/VA267**
	180	41	140	96,5	720	150	*300*	–	4,55	**6317-2Z/C4VA237**
90	160	30	101	73,5	70	350	*660*	–	2,3	**6218-2Z/VA228**
	160	30	101	73,5	760	150	*300*	–	2,35	**6218-2Z/C4VA237**
	160	30	101	73,5	480	250	*480*	–	2,35	**6218-2Z/VA267**
	190	43	151	108	680	150	*300*	–	5,3	**6318-2Z/C4VA237**[1)]
95	170	32	114	81,5	30	250	*480*	•	2,7	**6219-2Z/VA201**
	170	32	114	81,5	60	350	*660*	–	2,7	**6219-2Z/VA228**
	170	32	114	81,5	720	150	*300*	–	2,8	**6219-2Z/C4VA237**[1)]
	170	32	114	81,5	450	250	*480*	–	2,8	**6219-2Z/VA267**
	200	45	159	118	650	150	*300*	–	6,05	**6319-2Z/C4VA237**

[1)] Check availability prior to incorporating in a bearing arrangement design.

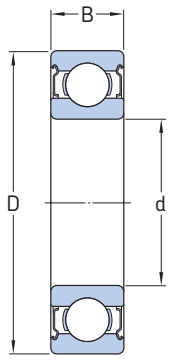

2Z/VA201

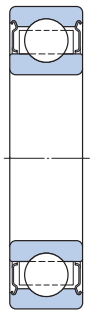

2Z/VA208

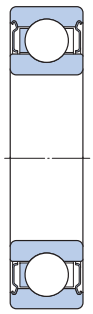

2Z/VA228

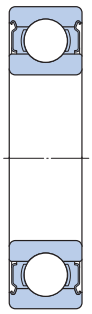

2Z/C4VA237
2Z/VA267

Principal dimensions			Basic load ratings dynamic	static	Limiting speed	Limiting temperature		Running in required	Mass	Designations
d	D	B	C	C_0						
mm			kN		r/min	°C	*°F*	–	kg	–
100	150	24	63,7	54	30	350	*660*	–	1,35	**6020-2Z/VA208**
	150	24	63,7	54	480	250	*480*	–	1,35	**6020-2Z/VA267**
	180	34	127	93	30	350	*660*	–	3,25	**6220-2Z/VA208**
	180	34	127	93	60	350	*660*	–	3,25	**6220-2Z/VA228**
	180	34	127	93	680	150	*300*	–	3,35	**6220-2Z/C4VA237**
	180	34	127	93	420	250	*480*	–	3,35	**6220-2Z/VA267**
	215	47	174	140	600	150	*300*	–	7,5	**6320-2Z/C4VA237**
110	170	28	85,2	73,5	30	350	*660*	–	2,05	**6022-2Z/VA208**
	170	28	85,2	73,5	420	250	*480*	–	2,1	**6022-2Z/VA267**
120	180	28	88,4	80	30	350	*660*	–	2,2	**6024-2Z/VA208**
	180	28	88,4	80	400	250	*480*	–	2,25	**6024-2Z/VA267**

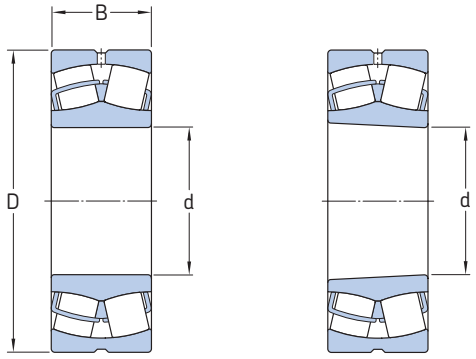

Cylindrical bore Tapered bore

Principal dimensions			Basic load ratings dynamic	static	Limiting speed	Mass	Designations Bearing with cylindrical bore	tapered bore	Calculation factors		
d	D	B	C	C_0					e	Y_1	Y_0
mm			kN		r/min	kg	–		–		
25	52	18	49	44	1 240	0,27	**22205 E/C4VA237**[1)]	**–**	0,35	1,9	1,8
30	62	20	64	60	1 040	0,3	**22206 E/C4VA237**	**–**	0,31	2,2	2,2
35	72	23	86,5	85	890	0,46	**22207 E/C4VA237**	**–**	0,31	2,2	2,2
40	80	23	96,5	90	800	0,55	**22208 E/C4VA237**	**22208 EK/C4VA237**[1)]	0,28	2,4	2,5
	90	33	150	140	730	1,1	**22308 E/C4VA237**	**22308 EK/C4VA237**	0,37	1,8	1,8
45	85	23	102	98	730	0,6	**22209 E/C4VA237**	**22209 EK/C4VA237**	0,26	2,6	2,5
	100	36	183	183	660	1,45	**22309 E/C4VA237**[1)]	**–**	0,37	1,8	1,8
50	90	23	104	108	680	0,65	**22210 E/C4VA237**	**22210 EK/C4VA237**	0,24	2,8	2,8
	110	40	220	224	600	1,95	**22310 E/C4VA237**	**22310 EK/C4VA237**[1)]	0,37	1,8	1,8
55	100	25	125	127	610	0,87	**22211 E/C4VA237**	**22211 EK/C4VA237**	0,24	2,8	2,8
	120	43	270	280	540	2,5	**22311 E/C4VA237**	**22311 EK/C4VA237**[1)]	0,35	1,9	1,8
60	110	28	156	166	560	1,2	**22212 E/C4VA237**	**–**	0,24	2,8	2,8
	130	46	310	335	500	3,2	**22312 E/C4VA237**	**22312 EK/C4VA237**[1)]	0,35	1,9	1,8
65	120	31	193	216	510	1,6	**22213 E/C4VA237**	**22213 EK/C4VA237**	0,24	2,8	2,8
	140	48	340	360	460	3,85	**22313 E/C4VA237**	**22313 EK/C4VA237**	0,35	1,9	1,8
70	125	31	208	228	490	1,6	**22214 E/C4VA237**	**–**	0,23	2,9	2,8
	150	51	400	430	430	4,7	**22314 E/C4VA237**	**22314 EK/C4VA237**	0,33	2	2
75	115	40	173	232	500	1,6	**24015 CC/C4W33VA237**	**–**	0,28	2,4	2,5
	130	31	212	240	460	1,75	**22215 E/C4VA237**	**22215 EK/C4VA237**	0,22	3	2,8
	160	55	440	475	400	5,7	**22315 E/C4VA237**	**22315 EK/C4VA237**[1)]	0,35	1,9	1,8
80	140	33	236	270	430	2,15	**22216 E/C4VA237**	**22216 EK/C4VA237**	0,22	3	2,8
	170	58	490	540	380	6,8	**22316 E/C4VA237**	**22316 EK/C4VA237**	0,35	1,9	1,8
85	150	36	285	325	400	2,75	**22217 E/C4VA237**	**22217 EK/C4VA237**[1)]	0,22	3	2,8
	180	60	550	620	360	7,9	**22317 E/C4VA237**	**22317 EK/C4VA237**	0,33	2	2
90	160	40	325	375	380	3,5	**22218 E/C4VA237**	**22218 EK/C4VA237**	0,24	2,8	2,8
	190	64	610	695	340	9,3	**22318 E/C4VA237**	**22318 EK/C4VA237**	0,33	2	2
95	200	67	670	765	320	11	**22319 E/C4VA237**[1)]	**22319 EK/C4VA237**	0,33	2	2

[1)] Check availability prior to incorporating in a bearing arrangement design.

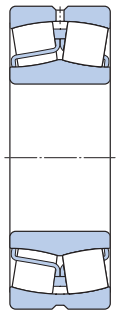

Cylindrical bore

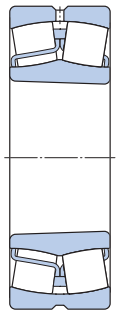

Tapered bore

Principal dimensions			Basic load ratings dynamic	static	Limiting speed	Mass	Designations Bearing with cylindrical bore	tapered bore	Calculation factors		
d	D	B	C	C_0					e	Y_1	Y_0
mm			kN		r/min	kg	–		–		
100	150	50	285	415	380	3,25	**24020 CC/C4W33VA237**	**–**	0,28	2,4	2,5
	165	52	365	490	360	4,7	**23120 CC/C4W33VA237**	**23120 CCK/C4W33VA237**	0,3	2,3	2,2
	165	65	455	640	360	5,8	**24120 CC/C4W33VA237**	**–**	0,37	1,8	1,8
	180	46	425	490	340	5,05	**22220 E/C4VA237**	**22220 EK/C4VA237**	0,24	2,8	2,8
	180	60,3	475	600	340	7,05	**23220 CC/C4W33VA237**	**23220 CCK/C4W33VA237**	0,33	2	2
	215	73	815	950	300	14	**22320 E/C4VA237**	**22320 EK/C4VA237**	0,33	2	2
110	170	45	310	440	340	3,9	**23022 CC/C4W33VA237**	**23022 CCK/C4W33VA237**	0,23	2,9	2,8
	170	60	415	620	340	5,15	**24022 CC/C4W33VA237**	**–**	0,33	2	2
	180	56	430	585	330	5,9	**23122 CC/C4W33VA237**	**23122 CCK/C4W33VA237**	0,3	2,3	2,2
	180	69	520	750	330	7,3	**24122 CC/C4W33VA237**	**24122 CCK30/C4W33VA237**[1)]	0,37	1,8	1,8
	200	53	560	640	300	7,2	**22222 E/C4VA237**	**22222 EK/C4VA237**	0,25	2,7	2,5
	200	69,8	600	765	300	10	**23222 CC/C4W33VA237**	**23222 CCK/C4W33VA237**	0,33	2	2
	240	80	950	1 120	270	19	**22322 E/C4VA237**	**22322 EK/C4VA237**	0,33	2	2
120	180	46	355	510	320	4,35	**23024 CC/C4W33VA237**	**23024 CCK/C4W33VA237**	0,22	3	2,8
	180	60	430	670	320	5,6	**24024 CC/C4W33VA237**	**24024 CCK30/C4W33VA237**	0,3	2,3	2,2
	200	62	510	695	300	8,25	**23124 CC/C4W33VA237**	**23124 CCK/C4W33VA237**	0,28	2,4	2,5
	200	80	655	950	300	10,5	**24124 CC/C4W33VA237**	**24124 CCK30/C4W33VA237**	0,37	1,8	1,8
	215	58	630	765	280	8,95	**22224 E/C4VA237**	**22224 EK/C4VA237**	0,26	2,6	2,5
	215	76	695	930	280	12,5	**23224 CC/C4W33VA237**	**23224 CCK/C4W33VA237**	0,35	1,9	1,8
	260	86	965	1 120	250	23,5	**22324 CC/C4W33VA237**[1)]	**22324 CCK/C4W33VA237**	0,35	1,9	1,8
130	200	52	430	610	290	6,2	**23026 CC/C4W33VA237**	**23026 CCK/C4W33VA237**	0,23	2,9	2,8
	200	69	540	815	290	8,3	**24026 CC/C4W33VA237**	**24026 CCK30/C4W33VA237**	0,31	2,2	2,2
	210	64	560	780	280	9,05	**23126 CC/C4W33VA237**	**23126 CCK/C4W33VA237**	0,28	2,4	2,5
	210	80	680	1 000	280	11,5	**24126 CC/C4W33VA237**	**24126 CCK30/C4W33VA237**	0,35	1,9	1,8
	230	64	735	930	260	11,5	**22226 E/C4VA237**	**22226 EK/C4VA237**	0,27	2,5	2,5
	230	80	780	1 060	260	15	**23226 CC/C4W33VA237**	**23226 CCK/C4W33VA237**	0,33	2	2
	280	93	1 120	1 320	230	30	**22326 CC/C4W33VA237**	**22326 CCK/C4W33VA237**	0,35	1,9	1,8
140	210	53	465	680	270	6,75	**23028 CC/C4W33VA237**	**23028 CCK/C4W33VA237**	0,22	3	2,8
	210	69	570	900	270	8,8	**24028 CC/C4W33VA237**	**24028 CCK30/C4W33VA237**	0,3	2,3	2,2
	225	68	630	900	260	11	**23128 CC/C4W33VA237**	**23128 CCK/C4W33VA237**	0,28	2,4	2,5
	225	85	765	1 160	260	14	**24128 CC/C4W33VA237**	**–**	0,35	1,9	1,8
	250	68	710	900	240	14,5	**22228 CC/C4W33VA237**[1)]	**22228 CCK/C4W33VA237**	0,26	2,6	2,5
	250	88	915	1 250	240	19,5	**23228 CC/C4W33VA237**	**23228 CCK/C4W33VA237**	0,33	2	2
	300	102	1 290	1 560	210	37,5	**22328 CC/C4W33VA237**	**22328 CCK/C4W33VA237**	0,35	1,9	1,8

[1)] Check availability prior to incorporating in a bearing arrangement design.

Spherical roller bearings for high temperature applications

d **150 – 260** mm

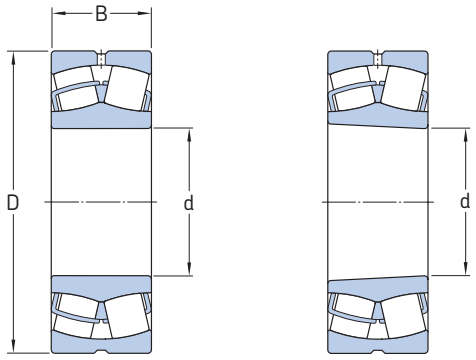

Cylindrical bore Tapered bore

Principal dimensions			Basic load ratings dynamic	static	Limiting speed	Mass	Designations Bearing with cylindrical bore	tapered bore	Calculation factors		
d	D	B	C	C_0					e	Y_1	Y_0
mm			kN		r/min	kg	–		–		
150	225	56	510	750	250	8,2	**23030 CC/C4W33VA237**	**23030 CCK/C4W33VA237**	0,22	3	2,8
	225	75	655	1 040	250	11	**24030 CC/C4W33VA237**	**24030 CCK30/C4W33VA237**	0,3	2,3	2,2
	250	80	830	1 200	240	16,5	**23130 CC/C4W33VA237**	**23130 CCK/C4W33VA237**	0,3	2,3	2,2
	250	100	1 020	1 530	240	20,5	**24130 CC/C4W33VA237**	**24130 CCK30/C4W33VA237**	0,37	1,8	1,8
	270	73	850	1 080	220	18,5	**22230 CC/C4W33VA237**	**–**	0,26	2,6	2,5
	270	96	1 080	1 460	220	25	**23230 CC/C4W33VA237**	**23230 CCK/C4W33VA237**	0,35	1,9	1,8
	320	108	1 460	1 760	200	45	**22330 CC/C4W33VA237**	**22330 CCK/C4W33VA237**	0,35	1,9	1,8
160	240	60	585	880	240	10	**23032 CC/C4W33VA237**	**23032 CCK/C4W33VA237**	0,22	3	2,8
	240	80	750	1 200	240	13,5	**24032 CC/C4W33VA237**	**24032 CCK30/C4W33VA237**	0,3	2,3	2,2
	270	86	980	1 370	220	21	**23132 CC/C4W33VA237**	**23132 CCK/C4W33VA237**	0,3	2,3	2,2
	270	109	1 180	1 760	220	26	**24132 CC/C4W33VA237**	**24132 CCK30/C4W33VA237**	0,4	1,7	1,6
	290	80	1 000	1 290	210	23	**22232 CC/C4W33VA237**[1)]	**22232 CCK/C4W33VA237**	0,26	2,6	2,5
	290	104	1 220	1 660	210	32	**23232 CC/C4W33VA237**	**23232 CCK/C4W33VA237**	0,35	1,9	1,8
	340	114	1 600	1 960	190	53,5	**22332 CC/C4W33VA237**	**22332 CCK/C4W33VA237**[1)]	0,35	1,9	1,8
170	260	67	710	1 060	220	13,5	**23034 CC/C4W33VA237**	**23034 CCK/C4W33VA237**	0,23	2,9	2,8
	260	90	930	1 460	220	18	**24034 CC/C4W33VA237**	**24034 CCK30/C4W33VA237**	0,33	2	2
	280	88	1 040	1 500	210	22,5	**23134 CC/C4W33VA237**	**23134 CCK/C4W33VA237**	0,3	2,3	2,2
	280	109	1 220	1 860	210	28,5	**24134 CC/C4W33VA237**	**24134 CCK30/C4W33VA237**	0,37	1,8	1,8
	310	86	1 120	1 460	200	29,5	**22234 CC/C4W33VA237**[1)]	**–**	0,27	2,5	2,5
	310	110	1 400	1 930	200	38,5	**23234 CC/C4W33VA237**	**23234 CCK/C4W33VA237**	0,35	1,9	1,8
	360	120	1 760	2 160	180	63	**22334 CC/C4W33VA237**	**22334 CCK/C4W33VA237**	0,33	2	2
180	280	74	830	1 250	200	17,5	**23036 CC/C4W33VA237**	**23036 CCK/C4W33VA237**	0,24	2,8	2,8
	280	100	1 080	1 730	200	23,5	**24036 CC/C4W33VA237**	**24036 CCK30/C4W33VA237**	0,33	2	2
	300	96	1 200	1 760	200	29	**23136 CC/C4W33VA237**	**23136 CCK/C4W33VA237**	0,3	2,3	2,2
	300	118	1 400	2 160	200	35,5	**24136 CC/C4W33VA237**	**24136 CCK30/C4W33VA237**[1)]	0,37	1,8	1,8
	320	86	1 180	1 560	190	30,5	**22236 CC/C4W33VA237**[1)]	**–**	0,26	2,6	2,5
	320	112	1 500	2 120	190	40,5	**23236 CC/C4W33VA237**	**23236 CCK/C4W33VA237**	0,35	1,9	1,8
	380	126	2 000	2 450	170	73,5	**22336 CC/C4W33VA237**	**–**	0,35	1,9	1,8
190	290	75	865	1 340	200	18,5	**23038 CC/C4W33VA237**	**23038 CCK/C4W33VA237**	0,23	2,9	2,8
	290	100	1 120	1 800	200	25	**24038 CC/C4W33VA237**	**24038 CCK30/C4W33VA237**	0,31	2,2	2,2
	320	104	1 370	2 080	180	36	**23138 CC/C4W33VA237**	**23138 CCK/C4W33VA237**	0,31	2,2	2,2
	320	128	1 600	2 500	180	44,5	**24138 CC/C4W33VA237**	**24138 CCK30/C4W33VA237**[1)]	0,4	1,7	1,6
	340	92	1 270	1 700	180	37,5	**22238 CC/C4W33VA237**	**22238 CCK/C4W33VA237**	0,26	2,6	2,5
	340	120	1 660	2 400	180	49,5	**23238 CC/C4W33VA237**[1)]	**23238 CCK/C4W33VA237**[1)]	0,35	1,9	1,8
	400	132	2 120	2 650	160	85	**22338 CC/C4W33VA237**	**22338 CCK/C4W33VA237**	0,35	1,9	1,8

[1)] Check availability prior to incorporating in a bearing arrangement design.

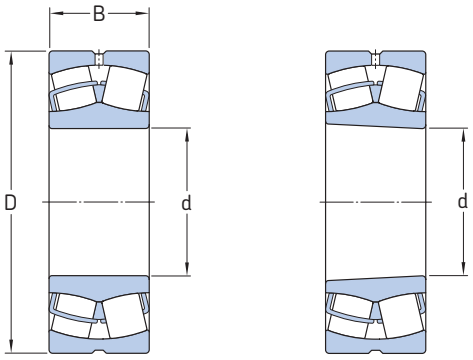

Cylindrical bore Tapered bore

Principal dimensions			Basic load ratings dynamic	static	Limiting speed	Mass	Designations Bearing with cylindrical bore	tapered bore	Calculation factors		
d	D	B	C	C_0					e	Y_1	Y_0
mm			kN		r/min	kg	–		–		
200	310	82	1 000	1 530	180	24	**23040 CC/C4W33VA237**	**23040 CCK/C4W33VA237**	0,24	2,8	2,8
	310	109	1 290	2 120	180	32	**24040 CC/C4W33VA237**	**24040 CCK30/C4W33VA237**	0,33	2	2
	340	112	1 600	2 360	170	44,5	**23140 CC/C4W33VA237**	**23140 CCK/C4W33VA237**	0,31	2,2	2,2
	340	140	1 800	2 800	170	55	**24140 CC/C4W33VA237**	**24140 CCK30/C4W33VA237**	0,4	1,7	1,6
	360	98	1 460	1 930	170	45	**22240 CC/C4W33VA237**	**22240 CCK/C4W33VA237**	0,26	2,6	2,5
	360	128	1 860	2 700	170	59,5	**23240 CC/C4W33VA237**	**23240 CCK/C4W33VA237**	0,35	1,9	1,8
220	340	90	1 220	1 860	170	31,5	**23044 CC/C4W33VA237**	**23044 CCK/C4W33VA237**	0,24	2,8	2,8
	340	118	1 560	2 600	170	41	**24044 CC/C4W33VA237**	**24044 CCK30/C4W33VA237**	0,33	2	2
	370	120	1 800	2 750	160	55	**23144 CC/C4W33VA237**	**23144 CCK/C4W33VA237**	0,3	2,3	2,2
	370	150	2 120	3 350	160	69	**24144 CC/C4W33VA237**	**24144 CCK30/C4W33VA237**	0,4	1,7	1,6
	400	108	1 760	2 360	150	62,5	**22244 CC/C4W33VA237**	**22244 CCK/C4W33VA237**	0,27	2,5	2,5
	400	144	2 360	3 450	150	84	**23244 CC/C4W33VA237**	**23244 CCK/C4W33VA237**	0,35	1,9	1,8
240	360	92	1 290	2 080	160	34,5	**23048 CC/C4W33VA237**	**23048 CCK/C4W33VA237**	0,23	2,9	2,8
	360	118	1 600	2 700	160	44,5	**24048 CC/C4W33VA237**	**24048 CCK30/C4W33VA237**	0,3	2,3	2,2
	400	128	2 080	3 200	150	68,5	**23148 CC/C4W33VA237**	**23148 CCK/C4W33VA237**	0,3	2,3	2,2
	400	160	2 400	3 900	150	85,5	**24148 CC/C4W33VA237**	**24148 CCK30/C4W33VA237**	0,4	1,7	1,6
260	400	104	1 600	2 550	140	50	**23052 CC/C4W33VA237**	**23052 CCK/C4W33VA237**	0,23	2,9	2,8
	400	140	2 040	3 450	140	67,5	**24052 CC/C4W33VA237**	**24052 CCK30/C4W33VA237**	0,33	2	2

Y-bearings for high temperature applications, metric shafts

d **20 – 60** mm

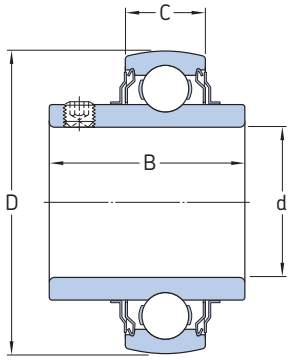

VA201

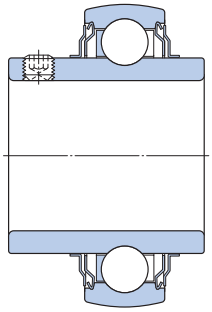

VA228

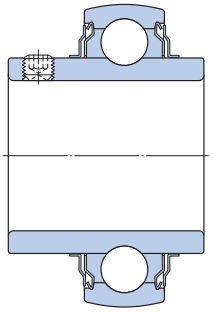

VA267

Principal dimensions				Basic load ratings dynamic	static	Limiting speed	Limiting temperature		Running in required	Mass	Designations
d	D	B	C	C	C_0						
mm				kN		r/min	°C	*°F*	–	kg	–
20	47	31	14	12,7	6,55	130	250	*480*	•	0,14	**YAR 204-2FW/VA201**
	47	31	14	12,7	6,55	260	350	*660*	–	0,14	**YAR 204-2FW/VA228**
	47	31	14	12,7	6,55	1 790	250	*480*	–	0,14	**YAR 204-2FW/VA267**
25	52	34,1	15	14	7,8	110	250	*480*	•	0,17	**YAR 205-2FW/VA201**
	52	34,1	15	14	7,8	230	350	*660*	–	0,17	**YAR 205-2FW/VA228**
	52	34,1	15	14	7,8	1 550	250	*480*	–	0,18	**YAR 205-2FW/VA267**
30	62	38,1	18	19,5	11,2	90	250	*480*	•	0,28	**YAR 206-2FW/VA201**
	62	38,1	18	19,5	11,2	190	350	*660*	–	0,28	**YAR 206-2FW/VA228**
	62	38,1	18	19,5	11,2	1 300	250	*480*	–	0,29	**YAR 206-2FW/VA267**
35	72	42,9	19	25,5	15,3	80	250	*480*	•	0,41	**YAR 207-2FW/VA201**
	72	42,9	19	25,5	15,3	160	350	*660*	–	0,41	**YAR 207-2FW/VA228**[1)]
	72	42,9	19	25,5	15,3	1 120	250	*480*	–	0,42	**YAR 207-2FW/VA267**
40	80	49,2	21	30,7	19	70	250	*480*	•	0,55	**YAR 208-2FW/VA201**
	80	49,2	21	30,7	19	150	350	*660*	–	0,55	**YAR 208-2FW/VA228**
	80	49,2	21	30,7	19	1 000	250	*480*	–	0,57	**YAR 208-2FW/VA267**
45	85	49,2	22	33,2	21,6	60	250	*480*	•	0,6	**YAR 209-2FW/VA201**
	85	49,2	22	33,2	21,6	130	350	*660*	–	0,6	**YAR 209-2FW/VA228**
	85	49,2	22	33,2	21,6	920	250	*480*	–	0,62	**YAR 209-2FW/VA267**
50	90	51,6	22	35,1	23,2	60	250	*480*	•	0,69	**YAR 210-2FW/VA201**
	90	51,6	22	35,1	23,2	120	350	*660*	–	0,69	**YAR 210-2FW/VA228**
	90	51,6	22	35,1	23,2	850	250	*480*	–	0,71	**YAR 210-2FW/VA267**
55	100	55,6	25	43,6	29	50	250	*480*	•	0,94	**YAR 211-2FW/VA201**
	100	55,6	25	43,6	29	110	350	*660*	–	0,94	**YAR 211-2FW/VA228**
	100	55,6	25	43,6	29	770	250	*480*	–	0,97	**YAR 211-2FW/VA267**
60	110	65,1	26	52,7	36	50	250	*480*	•	1,35	**YAR 212-2FW/VA201**
	110	65,1	26	52,7	36	100	350	*660*	–	1,35	**YAR 212-2FW/VA228**
	110	65,1	26	52,7	36	700	250	*480*	–	1,4	**YAR 212-2FW/VA267**

[1)] Check availability prior to incorporating in a bearing arrangement design.

Y-bearings for high temperature applications, inch shafts

d **3/4 – 2** in.
19,05 – 50,8 mm

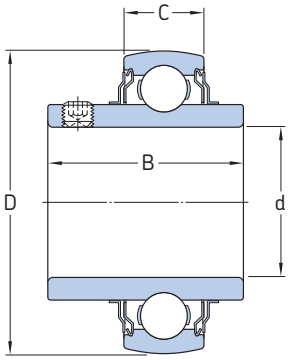

VA201

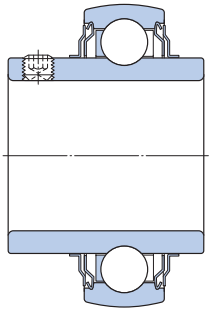

VA228

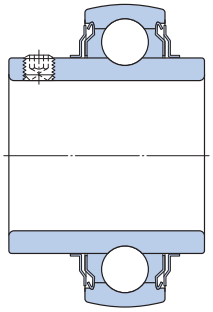

VA267

Principal dimensions				Basic load ratings dynamic	static	Limiting speed	Limiting temperature		Running in required	Mass	Designations
d	D	B	C	C	C_0						
in./mm				kN		r/min	°C	*°F*	–	kg	–
3/4	47	31	14	12,7	6,55	130	250	*480*	•	0,17	**YAR 204-012-2FW/VA201**
19,05	47	31	14	12,7	6,55	270	350	*660*	–	0,17	**YAR 204-012-2FW/VA228**
	47	31	14	12,7	6,55	1 810	250	*480*	–	0,18	**YAR 204-012-2FW/VA267**
1	52	34,1	15	14	7,8	110	250	*480*	•	0,19	**YAR 205-100-2FW/VA201**
25,4	52	34,1	15	14	7,8	230	350	*660*	–	0,19	**YAR 205-100-2FW/VA228**
	52	34,1	15	14	7,8	1 550	250	*480*	–	0,2	**YAR 205-100-2FW/VA267**
1 3/16	62	38,1	18	19,5	11,2	90	250	*480*	•	0,31	**YAR 206-103-2FW/VA201**[1)]
30,163	62	38,1	18	19,5	11,2	190	350	*660*	–	0,31	**YAR 206-103-2FW/VA228**
	62	38,1	18	19,5	11,2	1 300	250	*480*	–	0,32	**YAR 206-103-2FW/VA267**[1)]
1 1/4	72	42,9	19	25,5	15,3	80	250	*480*	•	0,52	**YAR 207-104-2FW/VA201**[1)]
31,75	72	42,9	19	25,5	15,3	170	350	*660*	–	0,52	**YAR 207-104-2FW/VA228**
	72	42,9	19	25,5	15,3	1 150	250	*480*	–	0,54	**YAR 207-104-2FW/VA267**[1)]
1 3/8	72	42,9	19	25,5	15,3	80	250	*480*	•	0,46	**YAR 207-106-2FW/VA201**
34,925	72	42,9	19	25,5	15,3	160	350	*660*	–	0,46	**YAR 207-106-2FW/VA228**
	72	42,9	19	25,5	15,3	1 120	250	*480*	–	0,47	**YAR 207-106-2FW/VA267**
1 7/16	72	42,9	19	25,5	15,3	80	250	*480*	•	0,42	**YAR 207-107-2FW/VA201**
36,513	72	42,9	19	25,5	15,3	160	350	*660*	–	0,42	**YAR 207-107-2FW/VA228**
	72	42,9	19	25,5	15,3	1 100	250	*480*	–	0,43	**YAR 207-107-2FW/VA267**
1 1/2	80	49,2	21	30,7	19	70	250	*480*	•	0,59	**YAR 208-108-2FW/VA201**
38,1	80	49,2	21	30,7	19	150	350	*660*	–	0,59	**YAR 208-108-2FW/VA228**
	80	49,2	21	30,7	19	1 010	250	*480*	–	0,61	**YAR 208-108-2FW/VA267**
1 11/16	85	49,2	22	33,2	21,6	70	250	*480*	•	0,75	**YAR 209-111-2FW/VA201**
42,863	85	49,2	22	33,2	21,6	140	350	*660*	–	0,75	**YAR 209-111-2FW/VA228**
	85	49,2	22	33,2	21,6	930	250	*480*	–	0,77	**YAR 209-111-2FW/VA267**
1 3/4	85	49,2	22	33,2	21,6	60	250	*480*	•	0,62	**YAR 209-112-2FW/VA201**[1)]
44,45	85	49,2	22	33,2	21,6	130	350	*660*	–	0,62	**YAR 209-112-2FW/VA228**
	85	49,2	22	33,2	21,6	920	250	*480*	–	0,64	**YAR 209-112-2FW/VA267**[1)]
1 15/16	90	51,6	22	35,1	23,2	60	250	*480*	•	0,78	**YAR 210-115-2FW/VA201**[1)]
49,213	90	51,6	22	35,1	23,2	120	350	*660*	–	0,78	**YAR 210-115-2FW/VA228**
	90	51,6	22	35,1	23,2	860	250	*480*	–	0,8	**YAR 210-115-2FW/VA267**[1)]
2	100	55,6	25	43,6	29	50	250	*480*	•	1,1	**YAR 211-200-2FW/VA201**
50,8	100	55,6	25	43,6	29	110	350	*660*	–	1,1	**YAR 211-200-2FW/VA228**
	100	55,6	25	43,6	29	790	250	*480*	–	1,15	**YAR 211-200-2FW/VA267**

[1)] Check availability prior to incorporating in a bearing arrangement design.

Y-bearings for high temperature applications, inch shafts

d **2 3/16 – 2 15/16** in.
55,563 – 74,613 mm

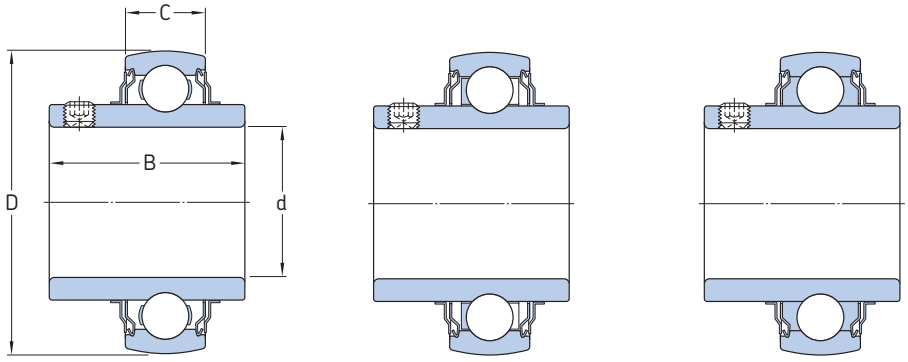

VA201 VA228 VA267

Principal dimensions				Basic load ratings dynamic	static	Limiting speed	Limiting temperature		Running in required	Mass	Designations
d	D	B	C	C	C_0						
in./mm				kN		r/min	°C	*°F*	–	kg	–
2 3/16	100	55,6	25	25	29	50	250	*480*	•	1,05	**YAR 211-203-2FW/VA201**[1]
55,563	100	55,6	25	25	29	110	350	*660*	–	1,05	**YAR 211-203-2FW/VA228**[1]
	100	55,6	25	25	29	770	250	*480*	–	1,1	**YAR 211-203-2FW/VA267**[1]
2 7/16	110	65,1	26	52,7	36	50	250	*480*	•	1,35	**YAR 212-207-2FW/VA201**
61,913	110	65,1	26	52,7	36	100	350	*660*	–	1,35	**YAR 212-207-2FW/VA228**
	110	65,1	26	52,7	36	690	250	*480*	–	1,4	**YAR 212-207-2FW/VA267**
2 15/16	130	73,1	29	66,3	49	40	250	*480*	•	2,2	**YAR 215-215-2FW/VA201**
74,613	130	73,1	29	66,3	49	80	350	*660*	–	2,2	**YAR 215-215-2FW/VA228**
	130	73,1	29	66,3	49	580	250	*480*	–	2,25	**YAR 215-215-2FW/VA267**

[1] Check availability prior to incorporating in a bearing arrangement design.

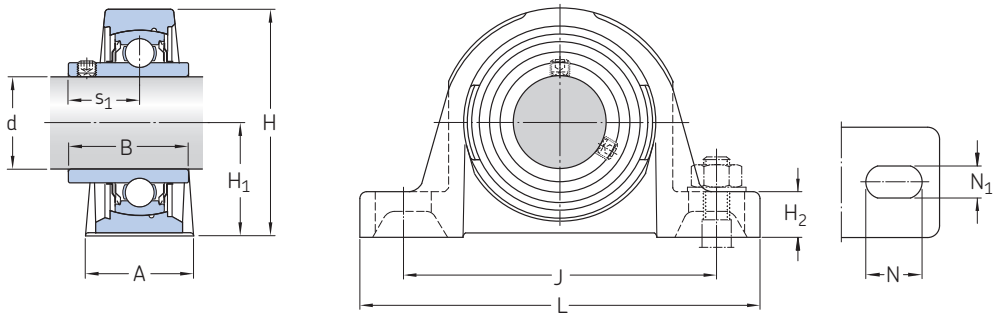

Dimensions											Mass	Designations
d	A	B	H	H_1	H_2	J	L	N	N_1	s_1		
mm											kg	–
20	32	31	64	33,3	14	97	127	20,5	11,5	18,3	0,57	**SY 20 TF/VA201**
	32	31	64	33,3	14	97	127	20,5	11,5	18,3	0,57	**SY 20 TF/VA228**
	32	31	64	33,3	14	97	127	20,5	11,5	18,3	0,57	**SY 20 TF/VA267**
25	36	34,1	70	36,5	16	102	130	19,5	11,5	19,8	0,73	**SY 25 TF/VA201**
	36	34,1	70	36,5	16	102	130	19,5	11,5	19,8	0,73	**SY 25 TF/VA228**
	36	34,1	70	36,5	16	102	130	19,5	11,5	19,8	0,74	**SY 25 TF/VA267**
30	40	38,1	82	42,9	16,5	117,5	152	23,5	14	22,2	1,1	**SY 30 TF/VA201**
	40	38,1	82	42,9	16,5	117,5	152	23,5	14	22,2	1,1	**SY 30 TF/VA228**
	40	38,1	82	42,9	16,5	117,5	152	23,5	14	22,2	1,1	**SY 30 TF/VA267**
35	45	42,9	93	47,6	19	126	160	21	14	25,4	1,45	**SY 35 TF/VA201**
	45	42,9	93	47,6	19	126	160	21	14	25,4	1,45	**SY 35 TF/VA228**[1)]
	45	42,9	93	47,6	19	126	160	21	14	25,4	1,45	**SY 35 TF/VA267**
40	48	49,2	99	49,2	19	135,5	175	24,5	14	30,2	1,8	**SY 40 TF/VA201**
	48	49,2	99	49,2	19	135,5	175	24,5	14	30,2	1,8	**SY 40 TF/VA228**
	48	49,2	99	49,2	19	135,5	175	24,5	14	30,2	1,8	**SY 40 TF/VA267**
45	48,3	49,2	107	54	21	143,5	187	22,5	14	30,2	2,3	**SY 45 TF/VA201**
	48,3	49,2	107	54	21	143,5	187	22,5	14	30,2	2,3	**SY 45 TF/VA228**
	48,3	49,2	107	54	21	143,5	187	22,5	14	30,2	2,3	**SY 45 TF/VA267**
50	54	51,6	114	57,2	22	157	203	26	18	32,6	2,7	**SY 50 TF/VA201**
	54	51,6	114	57,2	22	157	203	26	18	32,6	2,7	**SY 50 TF/VA228**
	54	51,6	114	57,2	22	157	203	26	18	32,6	2,7	**SY 50 TF/VA267**
55	60,4	55,6	127	63,5	23,8	171,5	219,1	27,5	18	33,4	3,6	**SY 55 TF/VA201**
	60,4	55,6	127	63,5	23,8	171,5	219,1	27,5	18	33,4	3,6	**SY 55 TF/VA228**
	60,4	55,6	127	63,5	23,8	171,5	219,1	27,5	18	33,4	3,6	**SY 55 TF/VA267**
60	60	65,1	138	69,9	26,5	190,5	240	29,5	18	39,7	4,5	**SY 60 TF/VA201**
	60	65,1	138	69,9	26,5	190,5	240	29,5	18	39,7	4,5	**SY 60 TF/VA228**
	60	65,1	138	69,9	26,5	190,5	240	29,5	18	39,7	4,55	**SY 60 TF/VA267**

[1)] Check availability prior to incorporating in a bearing arrangement design.

Designation Bearing unit	Bearing	**Basic load ratings** dynamic	static	**Limiting speed**	**Limiting temperature**		**Running in required**
		C	C_0				
–		kN		r/min	°C	*°F*	–
SY 20 TF/VA201	YAR 204-2FW/VA201	12,7	6,55	130	250	*480*	•
SY 20 TF/VA228	YAR 204-2FW/VA228	12,7	6,55	260	350	*660*	–
SY 20 TF/VA267	YAR 204-2FW/VA267	12,7	6,55	1 790	250	*480*	–
SY 25 TF/VA201	YAR 205-2FW/VA201	14	7,8	110	250	*480*	•
SY 25 TF/VA228	YAR 205-2FW/VA228	14	7,8	230	350	*660*	–
SY 25 TF/VA267	YAR 205-2FW/VA267	14	7,8	1 550	250	*480*	–
SY 30 TF/VA201	YAR 206-2FW/VA201	19,5	11,2	90	250	*480*	•
SY 30 TF/VA228	YAR 206-2FW/VA228	19,5	11,2	190	350	*660*	–
SY 30 TF/VA267	YAR 206-2FW/VA267	19,5	11,2	1 300	250	*480*	–
SY 35 TF/VA201	YAR 207-2FW/VA201	25,5	15,3	80	250	*480*	•
SY 35 TF/VA228[1)]	YAR 207-2FW/VA228	25,5	15,3	160	350	*660*	–
SY 35 TF/VA267	YAR 207-2FW/VA267	25,5	15,3	1 120	250	*480*	–
SY 40 TF/VA201	YAR 208-2FW/VA201	30,7	19	70	250	*480*	•
SY 40 TF/VA228	YAR 208-2FW/VA228	30,7	19	150	350	*660*	–
SY 40 TF/VA267	YAR 208-2FW/VA267	30,7	19	1 000	250	*480*	–
SY 45 TF/VA201	YAR 209-2FW/VA201	33,2	21,6	60	250	*480*	•
SY 45 TF/VA228	YAR 209-2FW/VA228	33,2	21,6	130	350	*660*	–
SY 45 TF/VA267	YAR 209-2FW/VA267	33,2	21,6	920	250	*480*	–
SY 50 TF/VA201	YAR 210-2FW/VA201	35,1	23,2	60	250	*480*	•
SY 50 TF/VA228	YAR 210-2FW/VA228	35,1	23,2	120	350	*660*	–
SY 50 TF/VA267	YAR 210-2FW/VA267	35,1	23,2	850	250	*480*	–
SY 55 TF/VA201	YAR 211-2FW/VA201	43,6	29	50	250	*480*	•
SY 55 TF/VA228	YAR 211-2FW/VA228	43,6	29	110	350	*660*	–
SY 55 TF/VA267	YAR 211-2FW/VA267	43,6	29	770	250	*480*	–
SY 60 TF/VA201	YAR 212-2FW/VA201	52,7	36	50	250	*480*	•
SY 60 TF/VA228	YAR 212-2FW/VA228	52,7	36	100	350	*660*	–
SY 60 TF/VA267	YAR 212-2FW/VA267	52,7	36	700	250	*480*	–

Y-bearing plummer block units for high temperature applications, inch shafts

d **3/4 – 2** in.

19,05 – 50,8 mm

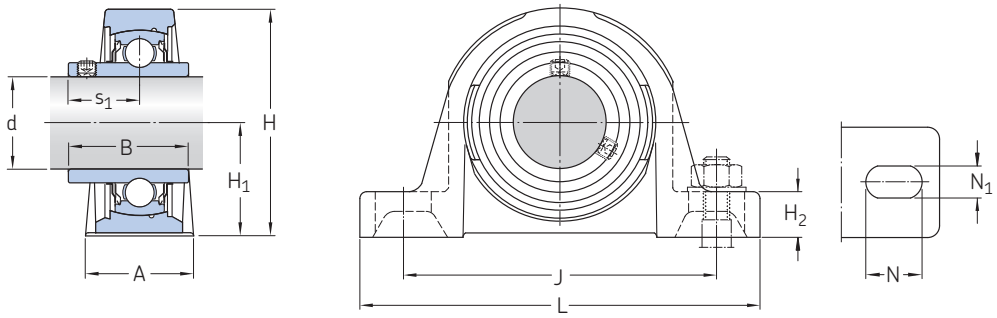

Dimensions											Mass	Designations
d	A	B	H	H_1	H_2	J	L	N	N_1	s_1		
in./mm	mm										kg	–
3/4	32	31	64	33,3	14	97	127	20,5	11,5	18,3	0,6	**SY 3/4 TF/VA201**
19,05	32	31	64	33,3	14	97	127	20,5	11,5	**18,3**	**0,6**	**SY 3/4 TF/VA228**
	32	31	64	33,3	14	97	127	20,5	11,5	**18,3**	**0,61**	**SY 3/4 TF/VA267**
1	36	34,1	70	36,5	16	102	130	19,5	11,5	**19,8**	**0,75**	**SY 1. TF/VA201**
25,4	36	34,1	70	36,5	16	102	130	19,5	11,5	**19,8**	**0,75**	**SY 1. TF/VA228**
	36	34,1	70	36,5	16	102	130	19,5	11,5	**19,8**	**0,76**	**SY 1. TF/VA267**
1 3/16	40	38,1	82	42,9	16,5	117,5	152	23,5	14	**22,2**	**1,15**	**SY 1.3/16 TF/VA201**[1)]
30,163	40	38,1	82	42,9	16,5	117,5	152	23,5	14	**22,2**	**1,15**	**SY 1.3/16 TF/VA228**
	40	38,1	82	42,9	16,5	117,5	152	23,5	14	**22,2**	**1,15**	**SY 1.3/16 TF/VA267**[1)]
1 1/4	45	42,9	93	47,6	19	126	160	21	14	**25,4**	**1,55**	**SY 1.1/4 TF/VA201**[1)]
31,75	45	42,9	93	47,6	19	126	160	21	14	**25,4**	**1,55**	**SY 1.1/4 TF/VA228**
	45	42,9	93	47,6	19	126	160	21	14	**25,4**	**1,6**	**SY 1.1/4 TF/VA267**[1)]
1 3/8	45	42,9	93	47,6	19	126	160	21	14	**25,4**	**1,5**	**SY 1.3/8 TF/VA201**
34,925	45	42,9	93	47,6	19	126	160	21	14	**25,4**	**1,5**	**SY 1.3/8 TF/VA228**
	45	42,9	93	47,6	19	126	160	21	14	**25,4**	**1,5**	**SY 1.3/8 TF/VA267**
1 7/16	45	42,9	93	47,6	19	126	160	21	14	**25,4**	**1,45**	**SY 1.7/16 TF/VA201**
36,513	45	42,9	93	47,6	19	126	160	21	14	**25,4**	**1,45**	**SY 1.7/16 TF/VA228**
	45	42,9	93	47,6	19	126	160	21	14	**25,4**	**1,5**	**SY 1.7/16 TF/VA267**
1 1/2	48	49,2	99	49,2	19	135,5	175	24,5	14	**30,2**	**1,85**	**SY 1.1/2 TF/VA201**
38,1	48	49,2	99	49,2	19	135,5	175	24,5	14	**30,2**	**1,85**	**SY 1.1/2 TF/VA228**
	48	49,2	99	49,2	19	135,5	175	24,5	14	**30,2**	**1,85**	**SY 1.1/2 TF/VA267**
1 11/16	48,3	49,2	107	54	21	143,5	187	22,5	14	**30,2**	**2,45**	**SY 1.11/16 TF/VA201**
42,863	48,3	49,2	107	54	21	143,5	187	22,5	14	**30,2**	**2,45**	**SY 1.11/16 TF/VA228**
	48,3	49,2	107	54	21	143,5	187	22,5	14	**30,2**	**2,45**	**SY 1.11/16 TF/VA267**
1 3/4	48,3	49,2	107	54	21	143,5	187	22,5	14	**30,2**	**2,3**	**SY 1.3/4 TF/VA201**[1)]
44,45	48,3	49,2	107	54	21	143,5	187	22,5	14	**30,2**	**2,3**	**SY 1.3/4 TF/VA228**
	48,3	49,2	107	54	21	143,5	187	22,5	14	**30,2**	**2,35**	**SY 1.3/4 TF/VA267**[1)]
1 15/16	54	51,6	114	57,2	22	157	203	26	18	32,6	2,8	**SY 1.15/16 TF/VA201**[1)]
49,213	54	51,6	114	57,2	22	157	203	26	18	32,6	2,8	**SY 1.15/16 TF/VA228**
	54	51,6	114	57,2	22	157	203	26	18	32,6	2,8	**SY 1.15/16 TF/VA267**[1)]
2	60,4	55,6	127	63,5	23,8	171,5	219,1	27,5	18	33,4	3,75	**SY 2. TF/VA201**
50,8	60,4	55,6	127	63,5	23,8	171,5	219,1	27,5	18	33,4	3,75	**SY 2. TF/VA228**
	60,4	55,6	127	63,5	23,8	171,5	219,1	27,5	18	33,4	3,8	**SY 2. TF/VA267**

[1)] Check availability prior to incorporating in a bearing arrangement design.

Designation Bearing unit	Bearing	**Basic load ratings** dynamic C	static C_0	**Limiting speed**	**Limiting temperature**		**Running in required**
–		kN		r/min	°C	*°F*	–
SY 3/4 TF/VA201	YAR 204-012-2FW/VA201	12,7	6,55	130	250	*480*	•
SY 3/4 TF/VA228	YAR 204-012-2FW/VA228	12,7	6,55	270	350	*660*	–
SY 3/4 TF/VA267	YAR 204-012-2FW/VA267	12,7	6,55	1 810	250	*480*	–
SY 1. TF/VA201	YAR 205-100-2FW/VA201	14	7,8	110	250	*480*	•
SY 1. TF/VA228	YAR 205-100-2FW/VA228	14	7,8	230	350	*660*	–
SY 1. TF/VA267	YAR 205-100-2FW/VA267	14	7,8	1 550	250	*480*	–
SY 1.3/16 TF/VA201[1)]	YAR 206-103-2FW/VA201	19,5	11,2	90	250	*480*	•
SY 1.3/16 TF/VA228	YAR 206-103-2FW/VA228	19,5	11,2	190	350	*660*	–
SY 1.3/16 TF/VA267[1)]	YAR 206-103-2FW/VA267	19,5	11,2	1 300	250	*480*	–
SY 1.1/4 TF/VA201[1)]	YAR 207-104-2FW/VA201	25,5	15,3	80	250	*480*	•
SY 1.1/4 TF/VA228	YAR 207-104-2FW/VA228	25,5	15,3	170	350	*660*	–
SY 1.1/4 TF/VA267[1)]	YAR 207-104-2FW/VA267	25,5	15,3	1 150	250	*480*	–
SY 1.3/8 TF/VA201	YAR 207-106-2FW/VA201	25,5	15,3	80	250	*480*	•
SY 1.3/8 TF/VA228	YAR 207-106-2FW/VA228	25,5	15,3	160	350	*660*	–
SY 1.3/8 TF/VA267	YAR 207-106-2FW/VA267	25,5	15,3	1 120	250	*480*	–
SY 1.7/16 TF/VA201	YAR 207-107-2FW/VA201	25,5	15,3	80	250	*480*	•
SY 1.7/16 TF/VA228	YAR 207-107-2FW/VA228	25,5	15,3	160	350	*660*	–
SY 1.7/16 TF/VA267	YAR 207-107-2FW/VA267	25,5	15,3	1 100	250	*480*	–
SY 1.1/2 TF/VA201	YAR 208-108-2FW/VA201	30,7	19	70	250	*480*	•
SY 1.1/2 TF/VA228	YAR 208-108-2FW/VA228	30,7	19	150	350	*660*	–
SY 1.1/2 TF/VA267	YAR 208-108-2FW/VA267	30,7	19	1 010	250	*480*	–
SY 1.11/16 TF/VA201	YAR 209-111-2FW/VA201	33,2	21,6	70	250	*480*	•
SY 1.11/16 TF/VA228	YAR 209-111-2FW/VA228	33,2	21,6	140	350	*660*	–
SY 1.11/16 TF/VA267	YAR 209-111-2FW/VA267	33,2	21,6	930	250	*480*	–
SY 1.3/4 TF/VA201[1)]	YAR 209-112-2FW/VA201	33,2	21,6	60	250	*480*	•
SY 1.3/4 TF/VA228	YAR 209-112-2FW/VA228	33,2	21,6	130	350	*660*	–
SY 1.3/4 TF/VA267[1)]	YAR 209-112-2FW/VA267	33,2	21,6	920	250	*480*	–
SY 1.15/16 TF/VA201[1)]	YAR 210-115-2FW/VA201	35,1	23,2	60	250	*480*	•
SY 1.15/16 TF/VA228	YAR 210-115-2FW/VA228	35,1	23,2	120	350	*660*	**–**
SY 1.15/16 TF/VA267[1)]	YAR 210-115-2FW/VA267	35,1	23,2	860	250	*480*	**–**
SY 2. TF/VA201	YAR 211-200-2FW/VA201	43,6	29	50	250	*480*	•
SY 2. TF/VA228	YAR 211-200-2FW/VA228	43,6	29	110	350	*660*	**–**
SY 2. TF/VA267	YAR 211-200-2FW/VA267	43,6	29	790	250	*480*	**–**

Y-bearing plummer block units for high temperature applications, inch shafts

d **2 3/16 – 2 15/16** in.

55,563 – 74,613 mm

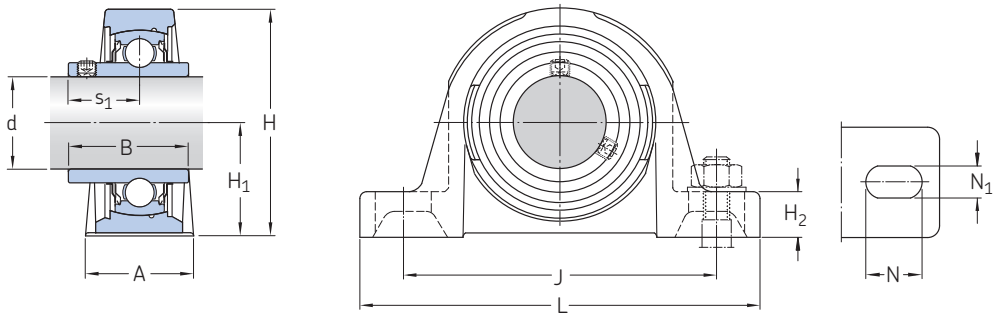

Dimensions											Mass	Designations
d	A	B	H	H_1	H_2	J	L	N	N_1	s_1		
in./mm	mm										kg	–
2 3/16	60,4	55,6	127	63,5	23,8	171,5	219,1	27,5	18	33,4	3,7	**SY 2.3/16 TF/VA201**[1]
55,563	60,4	55,6	127	63,5	23,8	171,5	219,1	27,5	18	33,4	3,7	**SY 2.3/16 TF/VA228**[1]
	60,4	55,6	127	63,5	23,8	171,5	219,1	27,5	18	33,4	3,75	**SY 2.3/16 TF/VA267**[1]
2 7/16	60	65,1	138	69,9	26,5	190,5	240	29,5	18	39,7	4,5	**SY 2.7/16 TF/VA201**
61,913	60	65,1	138	69,9	26,5	190,5	240	29,5	18	39,7	4,5	**SY 2.7/16 TF/VA228**
	60	65,1	138	69,9	26,5	190,5	240	29,5	18	39,7	4,55	**SY 2.7/16 TF/VA267**
2 15/16	71,6	73,1	166,1	82,55	32,8	215,9	279	35	22,23	46,11	7,5	**SY 2.15/16 TF/VA201**
74,613	71,6	73,1	166,1	82,55	32,8	215,9	279	35	22,23	46,11	7,5	**SY 2.15/16 TF/VA228**
	71,6	73,1	166,1	82,55	32,8	215,9	279	35	22,23	46,11	7,55	**SY 2.15/16 TF/VA267**

[1] Check availability prior to incorporating in a bearing arrangement design.

Designation Bearing unit	Bearing	**Basic load ratings** dynamic C	static C_0	**Limiting speed**	**Limiting temperature**		**Running in required**
–		kN		r/min	°C	*°F*	–
SY 2.3/16 TF/VA201[1)]	YAR 211-203-2FW/VA201	25	29	50	250	*480*	•
SY 2.3/16 TF/VA228[1)]	YAR 211-203-2FW/VA228	25	29	110	350	*660*	**–**
SY 2.3/16 TF/VA267[1)]	YAR 211-203-2FW/VA267	25	29	770	250	*480*	**–**
SY 2.7/16 TF/VA201	YAR 212-207-2FW/VA201	52,7	36	50	250	*480*	•
SY 2.7/16 TF/VA228	YAR 212-207-2FW/VA228	52,7	36	100	350	*660*	**–**
SY 2.7/16 TF/VA267	YAR 212-207-2FW/VA267	52,7	36	690	250	*480*	–
SY 2.15/16 TF/VA201	YAR 215-215-2FW/VA201	66,3	49	40	250	*480*	•
SY 2.15/16 TF/VA228	YAR 215-215-2FW/VA228	66,3	49	80	350	*660*	–
SY 2.15/16 TF/VA267	YAR 215-215-2FW/VA267	66,3	49	580	250	*480*	–

Flanged Y-bearing units with a cast housing with a square flange for high temperature applications, metric shafts
d **20 – 60** mm

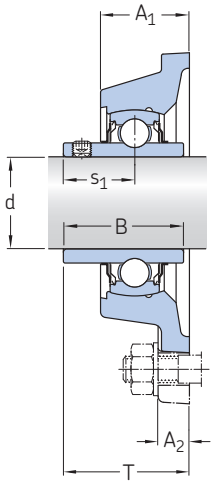

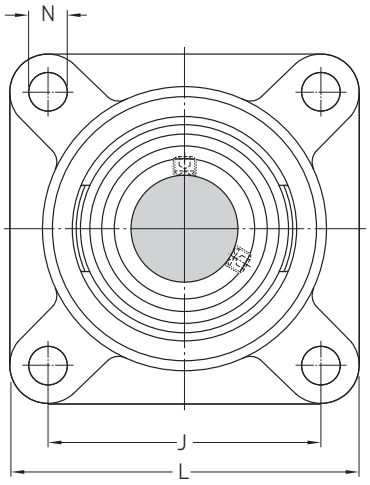

Dimensions									Mass	Designations
d	A_1	A_2	B	J	L	N	s_1	T		
mm									kg	–
20	29,5	11	31	63,5	86	11,1	18,3	37,3	0,6	**FY 20 TF/VA201**
	29,5	11	31	63,5	86	11,1	18,3	37,3	0,6	**FY 20 TF/VA228**
	29,5	11	31	63,5	86	11,1	18,3	37,3	0,6	**FY 20 TF/VA267**
25	30	12	34,1	70	95	12,7	19,8	38,8	0,77	**FY 25 TF/VA201**
	30	12	34,1	70	95	12,7	19,8	38,8	0,77	**FY 25 TF/VA228**
	30	12	34,1	70	95	12,7	19,8	38,8	0,78	**FY 25 TF/VA267**
30	32,5	13	38,1	82,5	108	12,7	22,2	42,2	1,1	**FY 30 TF/VA201**
	32,5	13	38,1	82,5	108	12,7	22,2	42,2	1,1	**FY 30 TF/VA228**
	32,5	13	38,1	82,5	108	12,7	22,2	42,2	1,1	**FY 30 TF/VA267**
35	34,5	13	42,9	92	118	14,3	25,4	46,4	1,4	**FY 35 TF/VA201**
	34,5	13	42,9	92	118	14,3	25,4	46,4	1,4	**FY 35 TF/VA228**[1)]
	34,5	13	42,9	92	118	14,3	25,4	46,4	1,4	**FY 35 TF/VA267**
40	38,5	14	49,2	101,5	130	14,3	30,2	54,2	1,9	**FY 40 TF/VA201**
	38,5	14	49,2	101,5	130	14,3	30,2	54,2	1,9	**FY 40 TF/VA228**
	38,5	14	49,2	101,5	130	14,3	30,2	54,2	1,9	**FY 40 TF/VA267**
45	39	14	49,2	105	137	15,9	30,2	54,2	2,1	**FY 45 TF/VA201**
	39	14	49,2	105	137	15,9	30,2	54,2	2,1	**FY 45 TF/VA228**
	39	14	49,2	105	137	15,9	30,2	54,2	2,1	**FY 45 TF/VA267**
50	43	15	51,6	111	143	15,9	32,6	60,6	2,5	**FY 50 TF/VA201**
	43	15	51,6	111	143	15,9	32,6	60,6	2,5	**FY 50 TF/VA228**
	43	15	51,6	111	143	15,9	32,6	60,6	2,5	**FY 50 TF/VA267**
55	47,5	16	55,6	130	162	19	33,4	64,4	3,6	**FY 55 TF/VA201**
	47,5	16	55,6	130	162	19	33,4	64,4	3,6	**FY 55 TF/VA228**
	47,5	16	55,6	130	162	19	33,4	64,4	3,6	**FY 55 TF/VA267**
60	52	17	65,1	143	175	19	39,7	73,7	4,65	**FY 60 TF/VA201**
	52	17	65,1	143	175	19	39,7	73,7	4,65	**FY 60 TF/VA228**
	52	17	65,1	143	175	19	39,7	73,7	4,7	**FY 60 TF/VA267**

[1)] Check availability prior to incorporating in a bearing arrangement design.

Designation Bearing unit	Bearing	**Basic load ratings** dynamic C	static C_0	**Limiting speed**	**Limiting temperature**		**Running in required**
–		kN		r/min	°C	*°F*	–
FY 20 TF/VA201	YAR 204-2FW/VA201	12,7	6,55	130	250	*480*	•
FY 20 TF/VA228	YAR 204-2FW/VA228	12,7	6,55	260	350	*660*	–
FY 20 TF/VA267	YAR 204-2FW/VA267	12,7	6,55	1 790	250	*480*	–
FY 25 TF/VA201	YAR 205-2FW/VA201	14	7,8	110	250	*480*	•
FY 25 TF/VA228	YAR 205-2FW/VA228	14	7,8	230	350	*660*	–
FY 25 TF/VA267	YAR 205-2FW/VA267	14	7,8	1 550	250	*480*	–
FY 30 TF/VA201	YAR 206-2FW/VA201	19,5	11,2	90	250	*480*	•
FY 30 TF/VA228	YAR 206-2FW/VA228	19,5	11,2	190	350	*660*	–
FY 30 TF/VA267	YAR 206-2FW/VA267	19,5	11,2	1 300	250	*480*	–
FY 35 TF/VA201	YAR 207-2FW/VA201	25,5	15,3	80	250	*480*	•
FY 35 TF/VA228[1)]	YAR 207-2FW/VA228	25,5	15,3	160	350	*660*	–
FY 35 TF/VA267	YAR 207-2FW/VA267	25,5	15,3	1 120	250	*480*	–
FY 40 TF/VA201	YAR 208-2FW/VA201	30,7	19	70	250	*480*	•
FY 40 TF/VA228	YAR 208-2FW/VA228	30,7	19	150	350	*660*	–
FY 40 TF/VA267	YAR 208-2FW/VA267	30,7	19	1 000	250	*480*	–
FY 45 TF/VA201	YAR 209-2FW/VA201	33,2	21,6	60	250	*480*	•
FY 45 TF/VA228	YAR 209-2FW/VA228	33,2	21,6	130	350	*660*	–
FY 45 TF/VA267	YAR 209-2FW/VA267	33,2	21,6	920	250	*480*	–
FY 50 TF/VA201	YAR 210-2FW/VA201	35,1	23,2	60	250	*480*	•
FY 50 TF/VA228	YAR 210-2FW/VA228	35,1	23,2	120	350	*660*	–
FY 50 TF/VA267	YAR 210-2FW/VA267	35,1	23,2	850	250	*480*	–
FY 55 TF/VA201	YAR 211-2FW/VA201	43,6	29	50	250	*480*	•
FY 55 TF/VA228	YAR 211-2FW/VA228	43,6	29	110	350	*660*	–
FY 55 TF/VA267	YAR 211-2FW/VA267	43,6	29	770	250	*480*	–
FY 60 TF/VA201	YAR 212-2FW/VA201	52,7	36	50	250	*480*	•
FY 60 TF/VA228	YAR 212-2FW/VA228	52,7	36	100	350	*660*	–
FY 60 TF/VA267	YAR 212-2FW/VA267	52,7	36	700	250	*480*	–

Flanged Y-bearing units with a cast housing with a square flange for high temperature applications, inch shafts

d **3/4 – 1 15/16** in.
19,05 – 49,213 mm

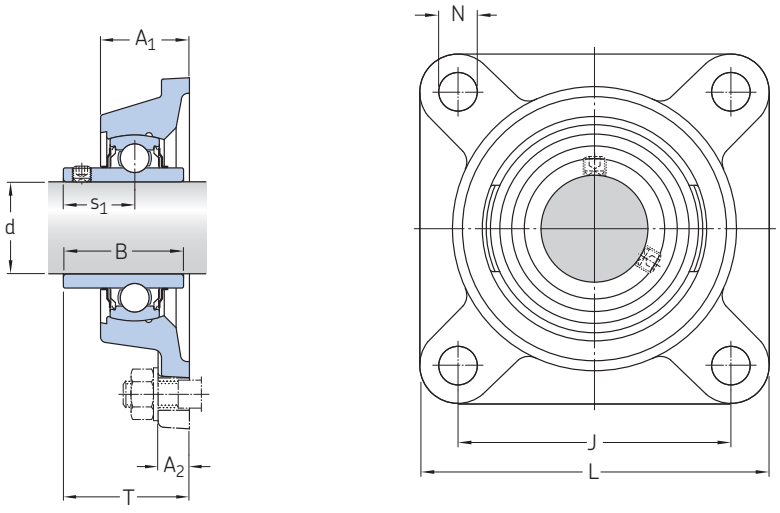

Dimensions									Mass	Designations
d	A_1	A_2	B	J	L	N	s_1	T		
in./mm									kg	–
3/4	29,5	11	31	86	63,5	11,1	18,3	37,3	0,63	**FY 3/4 TF/VA201**
19,05	29,5	11	31	86	63,5	11,1	18,3	37,3	0,63	**FY 3/4 TF/VA228**
	29,5	11	31	86	63,5	11,1	18,3	37,3	0,64	**FY 3/4 TF/VA267**
1	30	12	34,1	95	70	12,7	19,8	38,8	0,79	**FY 1. TF/VA201**
25,4	30	12	34,1	95	70	12,7	19,8	38,8	0,79	**FY 1. TF/VA228**
	30	12	34,1	95	70	12,7	19,8	38,8	0,8	**FY 1. TF/VA267**
1 3/16	32,5	13	38,1	108	82,5	12,7	22,2	42,2	1,1	**FY 1.3/16 TF/VA201**[1]
30,163	32,5	13	38,1	108	82,5	12,7	22,2	42,2	1,1	**FY 1.3/16 TF/VA228**
	32,5	13	38,1	108	82,5	12,7	22,2	42,2	1,1	**FY 1.3/16 TF/VA267**[1]
1 1/4	34,5	13	42,9	118	92	14,3	25,4	46,4	1,5	**FY 1.1/4 TF/VA201**[1]
31,75	34,5	13	42,9	118	92	14,3	25,4	46,4	1,5	**FY 1.1/4 TF/VA228**
	34,5	13	42,9	118	92	14,3	25,4	46,4	1,55	**FY 1.1/4 TF/VA267**[1]
1 7/16	34,5	13	42,9	118	92	14,3	25,4	46,4	1,4	**FY 1.7/16 TF/VA201**
36,513	34,5	13	42,9	118	92	14,3	25,4	46,4	1,4	**FY 1.7/16 TF/VA228**
	34,5	13	42,9	118	92	14,3	25,4	46,4	1,45	**FY 1.7/16 TF/VA267**
1 1/2	38,5	14	49,2	130	101,5	14,3	30,2	54,2	1,95	**FY 1.1/2 TF/VA201**
38,1	38,5	14	49,2	130	101,5	14,3	30,2	54,2	1,95	**FY 1.1/2 TF/VA228**
	38,5	14	49,2	130	101,5	14,3	30,2	54,2	1,95	**FY 1.1/2 TF/VA267**
1 11/16	39	14	49,2	137	105	15,9	30,2	54,2	2,25	**FY 1.11/16 TF/VA201**
42,863	39	14	49,2	137	105	15,9	30,2	54,2	2,25	**FY 1.11/16 TF/VA228**
	39	14	49,2	137	105	15,9	30,2	54,2	2,25	**FY 1.11/16 TF/VA267**
1 3/4	39	14	49,2	137	105	15,9	30,2	54,2	2,1	**FY 1.3/4 TF/VA201**[1]
44,45	39	14	49,2	137	105	15,9	30,2	54,2	2,1	**FY 1.3/4 TF/VA228**
	39	14	49,2	137	105	15,9	30,2	54,2	2,15	**FY 1.3/4 TF/VA267**[1]
1 15/16	43	15	51,6	143	111	15,9	32,6	60,6	2,6	**FY 1.15/16 TF/VA201**[1]
49,213	43	15	51,6	143	111	15,9	32,6	60,6	2,6	**FY 1.15/16 TF/VA228**
	43	15	51,6	143	111	15,9	32,6	60,6	2,6	**FY 1.15/16 TF/VA267**[1]

[1] Check availability prior to incorporating in a bearing arrangement design.

Designation Bearing unit	Bearing	**Basic load ratings** dynamic C	static C_0	**Limiting speed**	**Limiting temperature**		**Running in required**
–		kN		r/min	°C	*°F*	–
FY 3/4 TF/VA201	YAR 204-012-2FW/VA201	12,7	6,55	130	250	*480*	•
FY 3/4 TF/VA228	YAR 204-012-2FW/VA228	12,7	6,55	270	350	*660*	–
FY 3/4 TF/VA267	YAR 204-012-2FW/VA267	12,7	6,55	1 810	250	*480*	–
FY 1. TF/VA201	YAR 205-100-2FW/VA201	14	7,8	110	250	*480*	•
FY 1. TF/VA228	YAR 205-100-2FW/VA228	14	7,8	230	350	*660*	–
FY 1. TF/VA267	YAR 205-100-2FW/VA267	14	7,8	1 550	250	*480*	–
FY 1.3/16 TF/VA201[1)]	YAR 206-103-2FW/VA201	19,5	11,2	90	250	*480*	•
FY 1.3/16 TF/VA228	YAR 206-103-2FW/VA228	19,5	11,2	190	350	*660*	–
FY 1.3/16 TF/VA267[1)]	YAR 206-103-2FW/VA267	19,5	11,2	1 300	250	*480*	–
FY 1.1/4 TF/VA201[1)]	YAR 207-104-2FW/VA201	25,5	15,3	80	250	*480*	•
FY 1.1/4 TF/VA228	YAR 207-104-2FW/VA228	25,5	15,3	170	350	*660*	–
FY 1.1/4 TF/VA267[1)]	YAR 207-104-2FW/VA267	25,5	15,3	1 150	250	*480*	–
FY 1.7/16 TF/VA201	YAR 207-107-2FW/VA201	25,5	15,3	80	250	*480*	•
FY 1.7/16 TF/VA228	YAR 207-107-2FW/VA228	25,5	15,3	160	350	*660*	–
FY 1.7/16 TF/VA267	YAR 207-107-2FW/VA267	25,5	15,3	1 100	250	*480*	–
FY 1.1/2 TF/VA201	YAR 208-108-2FW/VA201	30,7	19	70	250	*480*	•
FY 1.1/2 TF/VA228	YAR 208-108-2FW/VA228	30,7	19	150	350	*660*	–
FY 1.1/2 TF/VA267	YAR 208-108-2FW/VA267	30,7	19	1 010	250	*480*	–
FY 1.11/16 TF/VA201	YAR 209-111-2FW/VA201	33,2	21,6	70	250	*480*	•
FY 1.11/16 TF/VA228	YAR 209-111-2FW/VA228	33,2	21,6	140	350	*660*	–
FY 1.11/16 TF/VA267	YAR 209-111-2FW/VA267	33,2	21,6	930	250	*480*	–
FY 1.3/4 TF/VA201[1)]	YAR 209-112-2FW/VA201	33,2	21,6	60	250	*480*	•
FY 1.3/4 TF/VA228	YAR 209-112-2FW/VA228	33,2	21,6	130	350	*660*	–
FY 1.3/4 TF/VA267[1)]	YAR 209-112-2FW/VA267	33,2	21,6	920	250	*480*	–
FY 1.15/16 TF/VA201[1)]	YAR 210-115-2FW/VA201	35,1	23,2	60	250	*480*	•
FY 1.15/16 TF/VA228	YAR 210-115-2FW/VA228	35,1	23,2	120	350	*660*	–
FY 1.15/16 TF/VA267[1)]	YAR 210-115-2FW/VA267	35,1	23,2	860	250	*480*	–

Flanged Y-bearing units with a cast housing with a square flange for high temperature applications, inch shafts
d **2 – 2 15/16** in.
50,8 – 74,613 mm

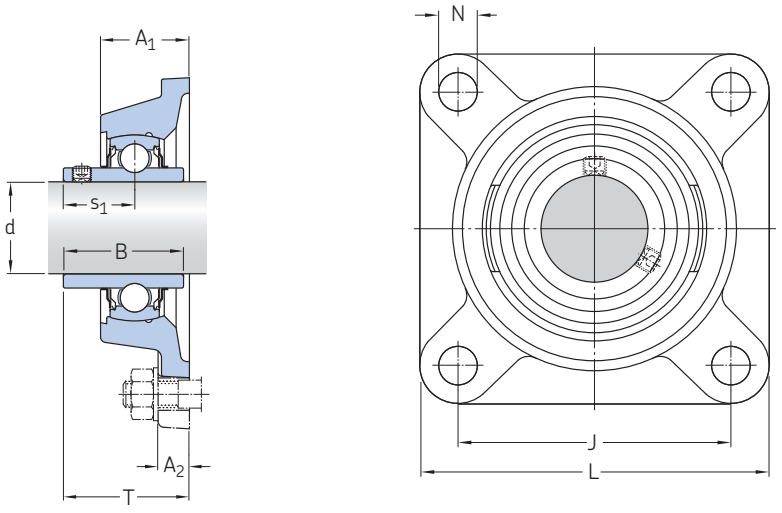

Dimensions									Mass	Designations
d	A_1	A_2	B	J	L	N	s_1	T		
in./mm									kg	–
2	47,5	16	55,6	162	130	19	33,4	64,4	3,75	**FY 2. TF/VA201**
50,8	47,5	16	55,6	162	130	19	33,4	64,4	3,75	**FY 2. TF/VA228**
	47,5	16	55,6	162	130	19	33,4	64,4	3,8	**FY 2. TF/VA267**
2 3/16	47,5	16	55,6	162	130	19	33,4	64,4	3,7	**FY 2.3/16 TF/VA201**[1]
55,563	47,5	16	55,6	162	130	19	33,4	64,4	3,7	**FY 2.3/16 TF/VA228**[1]
	47,5	16	55,6	162	130	19	33,4	64,4	3,75	**FY 2.3/16 TF/VA267**[1]
2 7/16	52	17	65,1	175	143	19	39,7	73,7	4,65	**FY 2.7/16 TF/VA201**
61,913	52	17	65,1	175	143	19	39,7	73,7	4,65	**FY 2.7/16 TF/VA228**
	52	17	65,1	175	143	19	39,7	73,7	4,7	**FY 2.7/16 TF/VA267**
2 15/16	65,1	19	73,1	196,9	152,4	22,2	46,11	87,4	6,3	**FY 2.15/16 TF/VA201**
74,613	65,1	19	73,1	196,9	152,4	22,2	46,11	87,4	6,3	**FY 2.15/16 TF/VA228**
	65,1	19	73,1	196,9	152,4	22,2	46,11	87,4	6,35	**FY 2.15/16 TF/VA267**

[1] Check availability prior to incorporating in a bearing arrangement design.

Designation Bearing unit	Bearing	**Basic load ratings** dynamic C	static C_0	**Limiting speed**	**Limiting temperature**		**Running in required**
–		kN		r/min	°C	*°F*	–
FY 2. TF/VA201	YAR 211-200-2FW/VA201	43,6	29	50	250	*480*	•
FY 2. TF/VA228	YAR 211-200-2FW/VA228	43,6	29	110	350	*660*	–
FY 2. TF/VA267	YAR 211-200-2FW/VA267	43,6	29	790	250	*480*	–
FY 2.3/16 TF/VA201[1)]	YAR 211-203-2FW/VA201	25	29	50	250	*480*	•
FY 2.3/16 TF/VA228[1)]	YAR 211-203-2FW/VA228	25	29	110	350	*660*	–
FY 2.3/16 TF/VA267[1)]	YAR 211-203-2FW/VA267	25	29	770	250	*480*	–
FY 2.7/16 TF/VA201	YAR 212-207-2FW/VA201	52,7	36	50	250	*480*	•
FY 2.7/16 TF/VA228	YAR 212-207-2FW/VA228	52,7	36	100	350	*660*	–
FY 2.7/16 TF/VA267	YAR 212-207-2FW/VA267	52,7	36	690	250	*480*	–
FY 2.15/16 TF/VA201	YAR 215-215-2FW/VA201	66,3	49	40	250	*480*	•
FY 2.15/16 TF/VA228	YAR 215-215-2FW/VA228	66,3	49	80	350	*660*	–
FY 2.15/16 TF/VA267	YAR 215-215-2FW/VA267	66,3	49	580	250	*480*	–

Flanged Y-bearing units with a cast housing with an oval flange for high temperature applications, metric shafts
d **20 – 55** mm

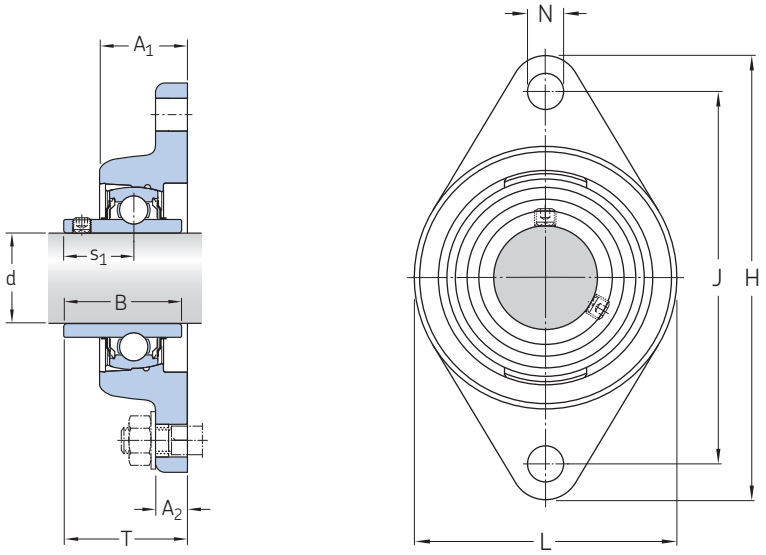

Dimensions										Mass	Designations
d	A_1	A_2	B	H	J	L	N	s_1	T		
mm										kg	–
20	29,61	11,11	31	112	89,7	60,5	11,1	18,3	32,6	0,5	**FYT 20 TF/VA201**
	29,61	11,11	31	112	89,7	60,5	11,1	18,3	32,6	0,5	**FYT 20 TF/VA228**
	29,61	11,11	31	112	89,7	60,5	11,1	18,3	32,6	0,5	**FYT 20 TF/VA267**
25	30	12	34,1	124	98,8	70	12,7	19,8	38,8	0,63	**FYT 25 TF/VA201**
	30	12	34,1	124	98,8	70	12,7	19,8	38,8	0,63	**FYT 25 TF/VA228**
	30	12	34,1	124	98,8	70	12,7	19,8	38,8	0,64	**FYT 25 TF/VA267**
30	32,7	13	38,1	141,5	116,7	83	12,7	22,2	42,2	0,93	**FYT 30 TF/VA201**
	32,7	13	38,1	141,5	116,7	83	12,7	22,2	42,2	0,93	**FYT 30 TF/VA228**
	32,7	13	38,1	141,5	116,7	83	12,7	22,2	42,2	0,94	**FYT 30 TF/VA267**
35	34,9	13	42,9	156	130,2	96	14,3	25,4	46,4	1,25	**FYT 35 TF/VA201**
	34,9	13	42,9	156	130,2	96	14,3	25,4	46,4	1,25	**FYT 35 TF/VA228**[1)]
	34,9	13	42,9	156	130,2	96	14,3	25,4	46,4	1,3	**FYT 35 TF/VA267**
40	38,5	14	49,2	171,5	143,7	102	14,3	30,2	54,2	1,65	**FYT 40 TF/VA201**
	38,5	14	49,2	171,5	143,7	102	14,3	30,2	54,2	1,65	**FYT 40 TF/VA228**
	38,5	14	49,2	171,5	143,7	102	14,3	30,2	54,2	1,65	**FYT 40 TF/VA267**
45	39	14	49,2	178,5	148,4	111	15,9	30,2	54,2	1,8	**FYT 45 TF/VA201**
	39	14	49,2	178,5	148,4	111	15,9	30,2	54,2	1,8	**FYT 45 TF/VA228**
	39	14	49,2	178,5	148,4	111	15,9	30,2	54,2	1,8	**FYT 45 TF/VA267**
50	43	15	51,6	189	157,2	116	15,9	32,6	60,6	2,25	**FYT 50 TF/VA201**
	43	15	51,6	189	157,2	116	15,9	32,6	60,6	2,25	**FYT 50 TF/VA228**
	43	15	51,6	189	157,2	116	15,9	32,6	60,6	2,25	**FYT 50 TF/VA267**
55	47,63	20,64	55,6	215,9	184,15	127	19	33,4	62,9	3,3	**FYT 55 TF/VA201**
	47,63	20,64	55,6	215,9	184,15	127	19	33,4	62,9	3,3	**FYT 55 TF/VA228**
	47,63	20,64	55,6	215,9	184,15	127	19	33,4	62,9	3,3	**FYT 55 TF/VA267**

[1)] Check availability prior to incorporating in a bearing arrangement design.

Designation Bearing unit	Bearing	**Basic load ratings** dynamic C	static C_0	**Limiting speed**	**Limiting temperature**		**Running in required**
–		kN		r/min	°C	*°F*	–
FYT 20 TF/VA201	YAR 204-2FW/VA201	12,7	6,55	130	250	*480*	•
FYT 20 TF/VA228	YAR 204-2FW/VA228	12,7	6,55	260	350	*660*	–
FYT 20 TF/VA267	YAR 204-2FW/VA267	12,7	6,55	1 790	250	*480*	–
FYT 25 TF/VA201	YAR 205-2FW/VA201	14	7,8	110	250	*480*	•
FYT 25 TF/VA228	YAR 205-2FW/VA228	14	7,8	230	350	*660*	–
FYT 25 TF/VA267	YAR 205-2FW/VA267	14	7,8	1 550	250	*480*	–
FYT 30 TF/VA201	YAR 206-2FW/VA201	19,5	11,2	90	250	*480*	•
FYT 30 TF/VA228	YAR 206-2FW/VA228	19,5	11,2	190	350	*660*	–
FYT 30 TF/VA267	YAR 206-2FW/VA267	19,5	11,2	1 300	250	*480*	–
FYT 35 TF/VA201	YAR 207-2FW/VA201	25,5	15,3	80	250	*480*	•
FYT 35 TF/VA228[1)]	YAR 207-2FW/VA228	25,5	15,3	160	350	*660*	–
FYT 35 TF/VA267	YAR 207-2FW/VA267	25,5	15,3	1 120	250	*480*	–
FYT 40 TF/VA201	YAR 208-2FW/VA201	30,7	19	70	250	*480*	•
FYT 40 TF/VA228	YAR 208-2FW/VA228	30,7	19	150	350	*660*	–
FYT 40 TF/VA267	YAR 208-2FW/VA267	30,7	19	1 000	250	*480*	–
FYT 45 TF/VA201	YAR 209-2FW/VA201	33,2	21,6	60	250	*480*	•
FYT 45 TF/VA228	YAR 209-2FW/VA228	33,2	21,6	130	350	*660*	–
FYT 45 TF/VA267	YAR 209-2FW/VA267	33,2	21,6	920	250	*480*	–
FYT 50 TF/VA201	YAR 210-2FW/VA201	35,1	23,2	60	250	*480*	•
FYT 50 TF/VA228	YAR 210-2FW/VA228	35,1	23,2	120	350	*660*	–
FYT 50 TF/VA267	YAR 210-2FW/VA267	35,1	23,2	850	250	*480*	–
FYT 55 TF/VA201	YAR 211-2FW/VA201	43,6	29	50	250	*480*	•
FYT 55 TF/VA228	YAR 211-2FW/VA228	43,6	29	110	350	*660*	–
FYT 55 TF/VA267	YAR 211-2FW/VA267	43,6	29	770	250	*480*	–

Flanged Y-bearing units with a cast housing with an oval flange flange for high temperature applications, inch shafts

d **3/4 – 2** in.

19,05 – 50,8 mm

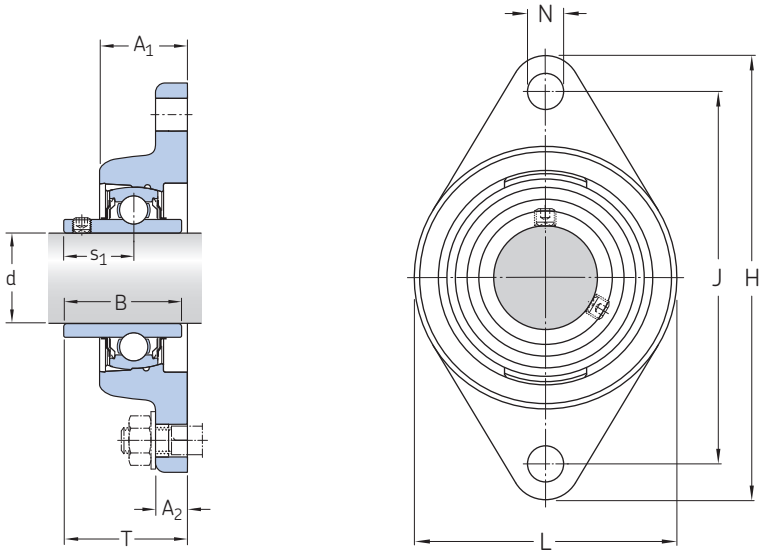

Dimensions										Mass	Designations
d	A_1	A_2	B	H	J	L	N	s_1	T		
in./mm										kg	–
3/4	29,61	11,11	31	112	89,7	60,5	11,1	18,3	32,6	0,53	**FYT 3/4 TF/VA201**
19,05	29,61	11,11	31	112	89,7	60,5	11,1	18,3	32,6	0,53	**FYT 3/4 TF/VA228**
	29,61	11,11	31	112	89,7	60,5	11,1	18,3	32,6	0,5351	**FYT 3/4 TF/VA267**
1	30	12	34,1	124	98,8	70	12,7	19,8	38,8	0,65	**FYT 1. TF/VA201**
25,4	30	12	34,1	124	98,8	70	12,7	19,8	38,8	0,65	**FYT 1. TF/VA228**
	30	12	34,1	124	98,8	70	12,7	19,8	39,8	0,6557	**FYT 1. TF/VA267**
1 1/4	34,9	13	42,9	156	130,2	96	14,3	25,4	46,4	1,38	**FYT 1.1/4 TF/VA201**[1)]
31,75	34,9	13	42,9	156	130,2	96	14,3	25,4	46,4	1,38	**FYT 1.1/4 TF/VA228**
	34,9	13	42,9	156	130,2	96	14,3	25,4	46,4	1,3956	**FYT 1.1/4 TF/VA267**[1)]
1 7/16	34,9	13	42,9	156	130,2	96	14,3	25,4	46,4	1,32	**FYT 1.3/8 TF/VA201**
36,513	34,9	13	42,9	156	130,2	96	14,3	25,4	46,4	1,32	**FYT 1.3/8 TF/VA228**
	34,9	13	42,9	156	130,2	96	14,3	25,4	46,4	1,3338	**FYT 1.3/8 TF/VA267**
1 1/2	38,5	14	49,2	171,5	143,7	102	14,3	30,2	54,2	1,69	**FYT 1.1/2 TF/VA201**
38,1	38,5	14	49,2	171,5	143,7	102	14,3	30,2	54,2	1,69	**FYT 1.1/2 TF/VA228**
	38,5	14	49,2	171,5	143,7	102	14,3	30,2	54,2	1,7077	**FYT 1.1/2 TF/VA267**
1 11/16	39	14	49,2	178,5	148,4	111	15,9	30,2	54,2	1,95	**FYT 1.11/16 TF/VA201**
42,863	39	14	49,2	178,5	148,4	111	15,9	30,2	54,2	1,95	**FYT 1.11/16 TF/VA228**
	39	14	49,2	178,5	148,4	111	15,9	30,2	54,2	1,9725	**FYT 1.11/16 TF/VA267**
1 3/4	39	14	49,2	178,5	148,4	111	15,9	30,2	54,2	1,82	**FYT 1.3/4 TF/VA201**[1)]
44,45	39	14	49,2	178,5	148,4	111	15,9	30,2	54,2	1,82	**FYT 1.3/4 TF/VA228**
	39	14	49,2	178,5	148,4	111	15,9	30,2	54,2	1,8386	**FYT 1.3/4 TF/VA267**[1)]
1 15/16	43	15	51,6	189	157,2	116	15,9	32,6	60,6	2,33	**FYT 1.15/16 TF/VA201**[1)]
49,213	43	15	51,6	189	157,2	116	15,9	32,6	60,6	2,33	**FYT 1.15/16 TF/VA228**
	43	15	51,6	189	157,2	116	15,9	32,6	60,6	2,3534	**FYT 1.15/16 TF/VA267**[1)]
2	47,63	20,64	55,6	215,9	184,15	127	19	33,4	69	3,45	**FYT 2. TF/VA201**
50,8	47,63	20,64	55,6	215,9	184,15	127	19	33,4	69	3,45	**FYT 2. TF/VA228**
	47,63	20,64	55,6	215,9	184,15	127	19	33,4	69	3,483	**FYT 2. TF/VA267**

[1)] Check availability prior to incorporating in a bearing arrangement design.

Designation Bearing unit	Bearing	**Basic load ratings** dynamic	static	**Limiting speed**	**Limiting temperature**		**Running in required**
		C	C_0				
–		kN		r/min	°C	*°F*	–
FYT 3/4 TF/VA201	YAR 204-012-2FW/VA201	12,7	6,55	130	250	*480*	•
FYT 3/4 TF/VA228	YAR 204-012-2FW/VA228	12,7	6,55	270	350	*660*	–
FYT 3/4 TF/VA267	YAR 204-012-2FW/VA267	12,7	6,55	1 810	250	*480*	–
FYT 1. TF/VA201	YAR 205-100-2FW/VA201	14	7,8	110	250	*480*	•
FYT 1. TF/VA228	YAR 205-100-2FW/VA228	14	7,8	230	350	*660*	–
FYT 1. TF/VA267	YAR 205-100-2FW/VA267	14	7,8	1 550	250	*480*	–
FYT 1.1/4 TF/VA201[1)]	YAR 207-104-2FW/VA201	25,5	15,3	80	250	*480*	•
FYT 1.1/4 TF/VA228	YAR 207-104-2FW/VA228	25,5	15,3	170	350	*660*	–
FYT 1.1/4 TF/VA267[1)]	YAR 207-104-2FW/VA267	25,5	15,3	1 150	250	*480*	–
FYT 1.3/8 TF/VA201	YAR 207-106-2FW/VA201	25,5	15,3	80	250	*480*	•
FYT 1.3/8 TF/VA228	YAR 207-106-2FW/VA228	25,5	15,3	160	350	*660*	–
FYT 1.3/8 TF/VA267	YAR 207-106-2FW/VA267	25,5	15,3	1 120	250	*480*	–
FYT 1.1/2 TF/VA201	YAR 208-108-2FW/VA201	30,7	19	70	250	*480*	•
FYT 1.1/2 TF/VA228	YAR 208-108-2FW/VA228	30,7	19	150	350	*660*	–
FYT 1.1/2 TF/VA267	YAR 208-108-2FW/VA267	30,7	19	1 010	250	*480*	–
FYT 1.11/16 TF/VA201	YAR 209-111-2FW/VA201	33,2	21,6	70	250	*480*	•
FYT 1.11/16 TF/VA228	YAR 209-111-2FW/VA228	33,2	21,6	140	350	*660*	–
FYT 1.11/16 TF/VA267	YAR 209-111-2FW/VA267	33,2	21,6	930	250	*480*	–
FYT 1.3/4 TF/VA201[1)]	YAR 209-112-2FW/VA201	33,2	21,6	60	250	*480*	•
FYT 1.3/4 TF/VA228	YAR 209-112-2FW/VA228	33,2	21,6	130	350	*660*	–
FYT 1.3/4 TF/VA267[1)]	YAR 209-112-2FW/VA267	33,2	21,6	920	250	*480*	–
FYT 1.15/16 TF/VA201[1)]	YAR 210-115-2FW/VA201	35,1	23,2	60	250	*480*	•
FYT 1.15/16 TF/VA228	YAR 210-115-2FW/VA228	35,1	23,2	120	350	*660*	–
FYT 1.15/16 TF/VA267[1)]	YAR 210-115-2FW/VA267	35,1	23,2	860	250	*480*	–
FYT 2. TF/VA201	YAR 211-200-2FW/VA201	43,6	29	50	250	*480*	•
FYT 2. TF/VA228	YAR 211-200-2FW/VA228	43,6	29	110	350	*660*	–
FYT 2. TF/VA267	YAR 211-200-2FW/VA267	43,6	29	790	250	*480*	–

® SKF is a registered trademark of the SKF Group.

NILOS-Ring is a registered trademark of Ziller GmbH & Co. KG.

© SKF Group 2014
The contents of this publication are the copyright of the publisher and may not be reproduced (even extracts) unless prior written permission is granted. Every care has been taken to ensure the accuracy of the information contained in this publication but no liability can be accepted for any loss or damage whether direct, indirect or consequential arising out of the use of the information contained herein.

PUB BU/P2 14961 EN · December 2014

Certain image(s) used under license from Shutterstock.com.

