5.05.510.644/0000

RAFIX 16, PCB plug-in socket



fields of application

- Measurement-control-regulation
- Electrical engineering
- Mechanical and system engineering
- Industrial robots

special features

- Suitable for RAFIX 16 switching elements with plug-in connection

description

Connection accessories for RAFIX 16 switching elements.

Zum Einlöten in Leiterplatten. Die Leiterplatte mit den Stecksockeln wird auf die Schaltelemente/Lampenfassungen aufgesteckt. Eine weitere Befestigung der Leiterplatte am Schaltelement ist nicht notwendig. Printanschlüsse 3,5 mm lang, für 1,3 mm Bohrung.

technical data

general	
Operating temperature, min.	-25 °C
Operating temperature, max.	70 °C
Packaging unit	50 pcs.
net weight	5.4 g
MOQ order	50 pcs.
RoHS compliant	Yes
REACH compliant	Yes
mounting diameters	
Outside dimension, length	24 mm
Outside dimension, width	22 mm
Outside dimension, height	14.5 mm
mechanical data	
Terminal on the rear	THT

direct links

- RAFI eCatalog

The information in this data sheet only contains general descriptions and / or performance features, which may not apply precisely as described to the respective application, and which my change due to further product enhancements. The technical data, illustrations and other information about our products are the mere results of individual technical testing. These descriptions and other product features are only binding if they expressly agreed upon at the time of the conclusion of a binding contract. In all other cases, we reserve the right to make technical changes as well as changes of availability. Pictures and other graphic illustrations are approximations only. All product names may be trademarks or brand names of the RAFI Group or any other sub-supplier of RAFI. The use of such by any third parties for their own purposes may infringe the rights of the respective entity holding those rights.

RAFI GmbH & Co. KG

Ravensburger Str. 128-134
88276 Berg / Ravensburg
Germany
www.rafi-group.com,
info.headquarters@rafi-group.com

drawings

System drawing

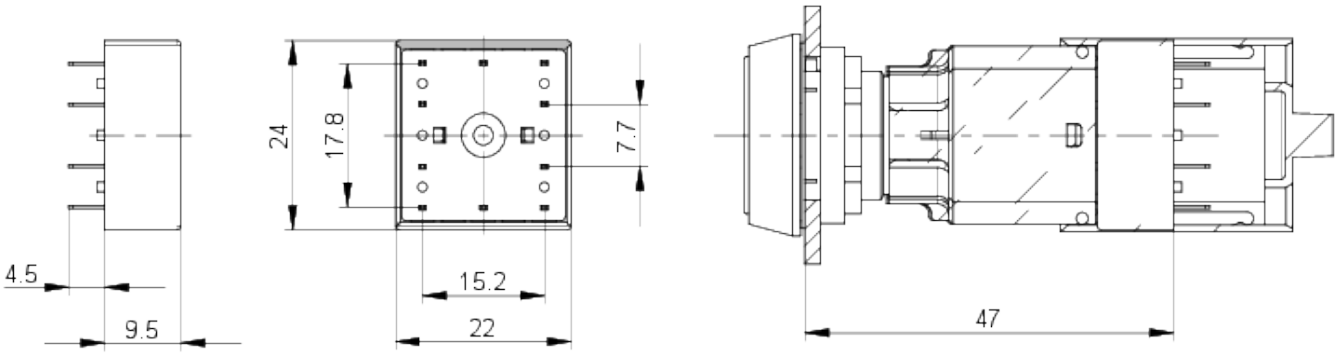

System drawing

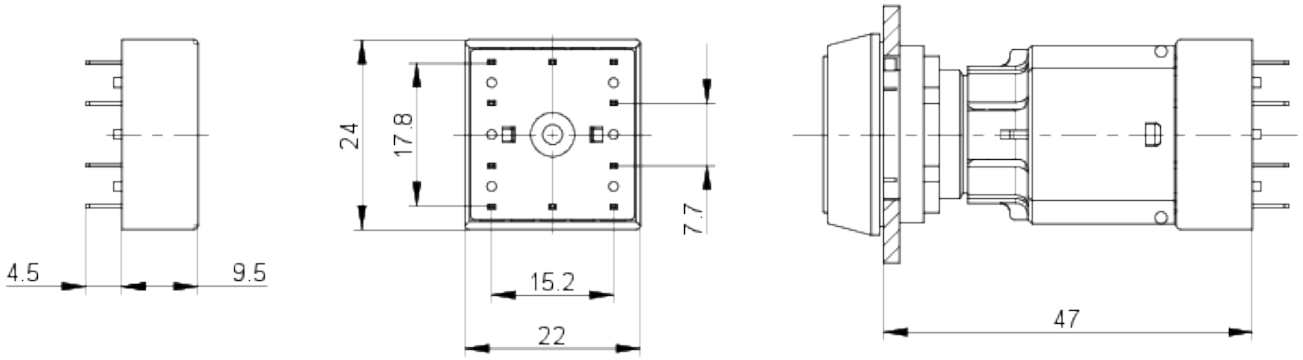

The information in this data sheet only contains general descriptions and / or performance features, which may not apply precisely as described to the respective application, and which my change due to further product enhancements. The technical data, illustrations and other information about our products are the mere results of individual technical testing. These descriptions and other product features are only binding if they expressly agreed upon at the time of the conclusion of a binding contract. In all other cases, we reserve the right to make technical changes as well as changes of availability. Pictures and other graphic illustrations are approximations only. All product names may be trademarks or brand names of the RAFI Group or any other sub-supplier of RAFI. The use of such by any third parties for their own purposes may infringe the rights of the respective entity holding those rights.

RAFI GmbH & Co. KG

Ravensburger Str. 128-134
88276 Berg / Ravensburg
Germany
www.rafi-group.com,
info.headquarters@rafi-group.com