Product Description

- Material: Aluminum
- Din-rail Optional
- Fan Optional
- Customization Available

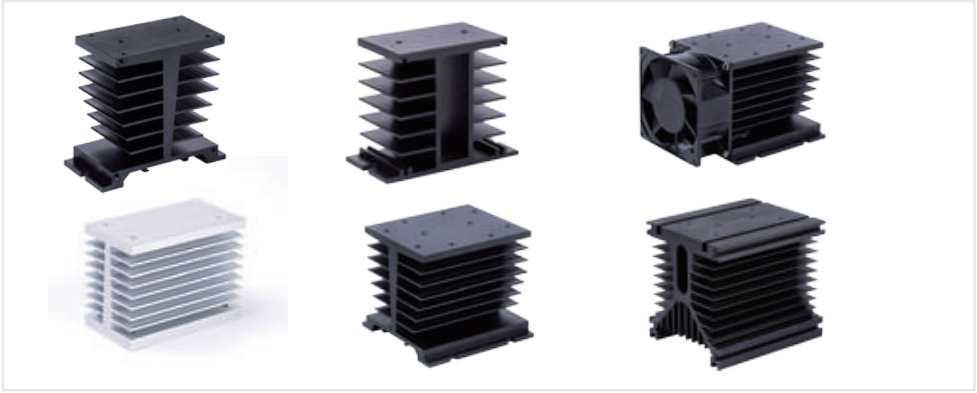

Ordering Information

KHS	-D	50	-F	110AC	(XXX)
KHS Series	Series A: A Series B: B Series C: C Series D: D Series E: E Series F: F Series G: G Series	Length 32: 32mm 49: 49mm 50: 50mm 70: 70mm 76: 76mm 90: 90mm 110: 110mm 150: 150mm	Accessory Blank: No Accessory F: Fan D: Din-rail B: Fan & Din-rail	Fan Voltage Blank: No Fan 24DC: 24VDC 110AC: 110VAC 220AC: 220VAC	Customized Code

Part Numbers

Heat Sink P/N	Dimension (mm)	Thermal Resistance (℃/W)	Suitable for SSR P/N
KHS-A32	80×50×32	2.8	KSIM
KHS-A50	80×50×50	2.1	KSI, KSIA, KSID, KSQM, KMB, KMC
KHS-B70	50×69×70	1.9	KSI, KSIA, KSID, KSQM, KMB, KMC
KHS-B70-D	50×83×81	1.9	KSI, KSIA, KSID, KSQM, KMB, KMC
KHS-B90-D	50×78×122	1.7	KSI, KSIA, KSID, KSQM, KMB, KMC
KHS-C49	100×80×49	1.7	KSI, KSIA, KSID, KSQM, KMB, KMC
KHS-C110	100×80×110	0.9	KSI, KSIA, KSID, KSQM, KMB, KMC, KSR, KSQ, KSQA, KSQC, KSQF, KMS, KRA, KSQE, KME, KMTYM
KHS-C110-F□□□	100×80×140	0.4	KSI, KSIA, KSID, KSQM, KMB, KMC, KSR, KSQ, KSQA, KSQC, KSQF, KMS, KRA, KSQE, KME, KMTYM
KHS-D50	106×96×50	1.6	KSI, KSIA, KSID, KSQM, KMB, KMC, KRA, KSQE, KME , KMTYM
KHS-D50-F□□□	106×96×80	0.6	KSI, KSIA, KSID, KSQM, KMB, KMC, KRA, KSQE, KME , KMTYM
KHS-D110	106×96×110	0.8	KSI, KSIA, KSID, KSQM, KMB, KMC, KSR, KSQ, KSQA, KSQC, KSQF, KMS, KRA, KSQE, KME, KMTYM
KHS-D110-F□□□	106×96×140	0.35	KSI, KSIA, KSID, KSQM, KMB, KMC, KSR, KSQ, KSQA, KSQC, KSQF, KMS, KRA, KSQE, KME, KMTYM
KHS-E76	123×67×76	1.5	KSI, KSIA, KSID, KSQM, KMB, KMC

Model	Dimension (mm)	Thermal Resistance (℃/W)	Suitable for SSR P/N
KHS-F150	142×55×150	1.1	KSI, KSIA, KSID, KSQM, KMB, KMC, KSR, KSQ, KSQA, KSQC, KSQF, KMS
KHS-G150	125×135×150	0.4	KSI, KSIA, KSID, KSQM, KMB, KMC, KSR, KSQ, KSQA, KSQC , KSQF, KMS
KHS-G150-F□□□	125×135×193	0.15	KSI, KSIA, KSID, KSQM, KMB, KMC, KSR, KSQ, KSQA, KSQC , KSQF, KMS

General Specifications

Series	A Series		B Series
Photo			
Model	KHS-A32	KHS-A50	KHS-B70
Thermal Resistance (°C/W)	2.8	2.1	1.9
N.W. (g)	70	115	235
Outer Dimension (mm)	80×50×32	80×50×50	50×69×70
Suitable for	KSIM	KSI, KSIA, KSID, KSQM, KMB, KMC	KSI, KSIA, KSID, KSQM, KMB, KMC

Series	B Series		C Series
Photo			
Model	KHS-B70-D	KHS-B90-D	KHS-C49
Thermal Resistance (°C/W)	1.9	1.7	1.7
N.W. (g)	290	390	255
Outer Dimension (mm)	50×83×81	50×78×122	100×80×49
Suitable for	KSI, KSIA, KSID, KSQM, KMB, KMC	KSI, KSIA, KSID, KSQM, KMB, KMC	KSI, KSIA, KSID, KSQM, KMB, KMC

Series	C Series		D Series
Photo			
Model	KHS-C110	KHS-C110-F□□□	KHS-D50
Thermal Resistance (°C/W)	0.9	0.4	1.6
N.W. (g)	560	830	375
Outer Dimension (mm)	100×80×110	100×80×140	106×96×50
Suitable for	KSI, KSIA, KSID, KSQM, KMB, KMC, KSR, KSQ, KSQA, KSQC, KSQF, KMS, KRA, KSQE, KME, KMTYM	KSI, KSIA, KSID, KSQM, KMB, KMC, KSR, KSQ, KSQA, KSQC, KSQF, KMS, KRA, KSQE, KME, KMTYM	KSI, KSIA, KSID, KSQM, KMB, KMC, KRA, KSQE, KME, KMTYM

Series		D Series	
Photo	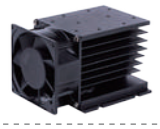	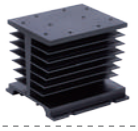	
Model	KHS-D50-F□□□	KHS-D110	KHS-D110-F□□□
Thermal Resistance (°C/W)	0.6	0.8	0.35
N.W. (g)	645	825	1095
Outer Dimension (mm)	106×96×80	106×96×110	106×96×140
Suitable for	KSI, KSIA, KSID, KSQM, KMB, KMC, KRA, KSQE, KME, KMTYM	KSI, KSIA, KSID, KSQM, KMB, KMC, KSR, KSQ, KSQA, KSQC, KSQF, KMS KRA, KSQE, KME, KMTYM	KSI, KSIA, KSID, KSQM, KMB, KMC, KSR, KSQ, KSQA, KSQC, KSQF, KMS KRA, KSQE, KME, KMTYM

General Specifications

Series	E Series	F Series	G Series
Photo	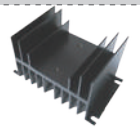		
Model	KHS-E76	KHS-F150	KHS-G150
Thermal Resistance (℃/W)	1.5	1.1	0.4
N.W. (g)	300	539	2320
Outer Dimension (mm)	123×67×76	142×55×150	125×135×150
Suitable for	KSI, KSIA, KSID, KSQM, KMB, KMC	KSI, KSIA, KSID, KSQM, KMB, KMC, KSR, KSQ, KSQA, KSQC, KSQF, KMS	KSI, KSIA, KSID, KSQM, KMB, KMC, KSR, KSQ, KSQA, KSQC, KSQF, KMS

Series	G Series
Photo	
Model	KHS-G150-F□□□
Thermal Resistance (℃/W)	0.15
N.W. (g)	2590
Outer Dimension (mm)	125×135×193
Suitable for	KSI, KSIA, KSID, KSQM, KMB, KMC, KSR, KSQ, KSQA, KSQC, KSQF, KMS

Outline Dimensions

A Series:

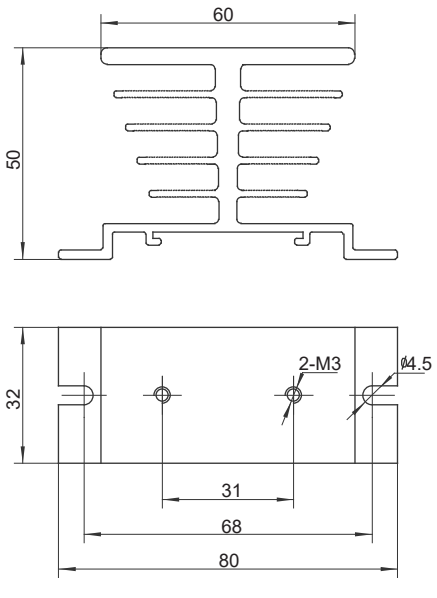

KHS-A32

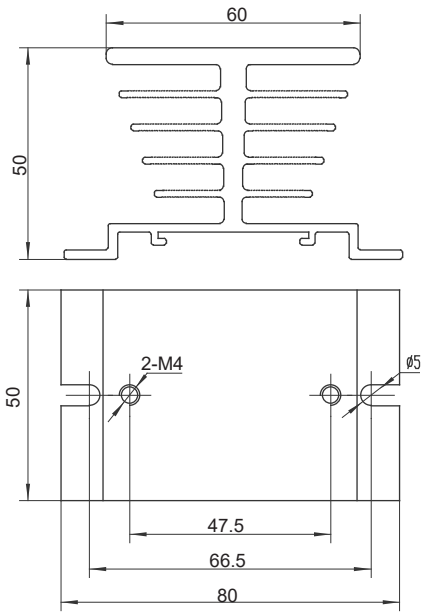

KHS-A50

Outline Dimensions

B Series:

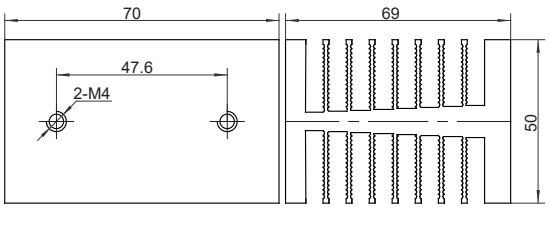

KHS-B70

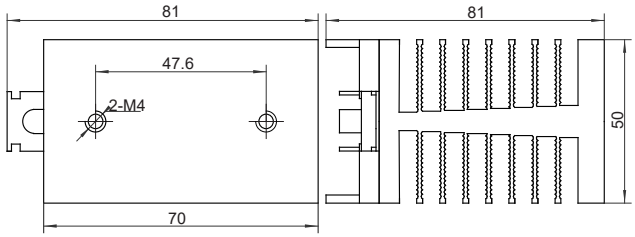

KHS-B70-D

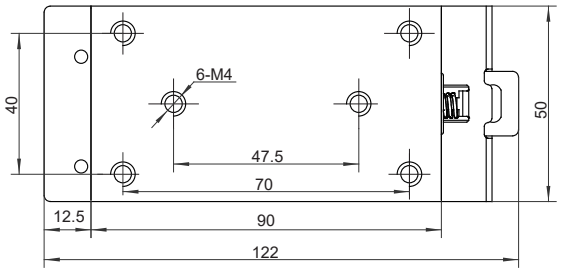

KHS-B90-D

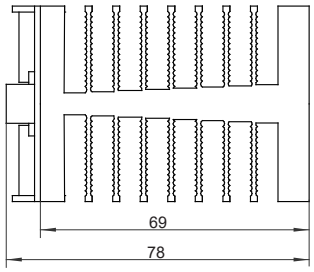

C Series:

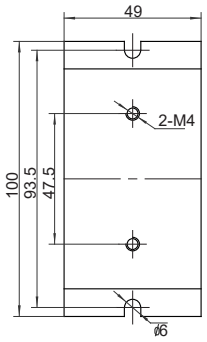

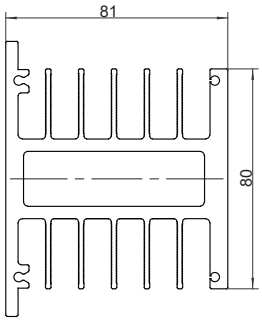

KHS-C49

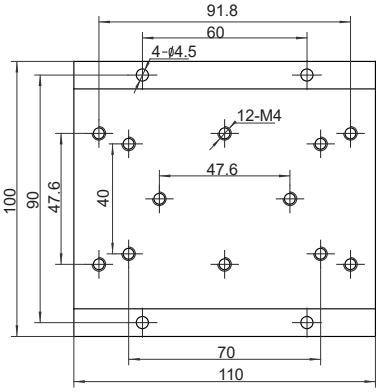

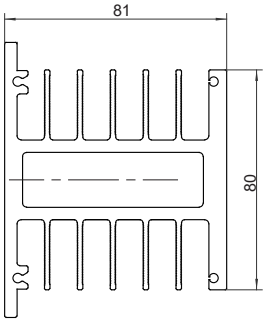

KHS-C110

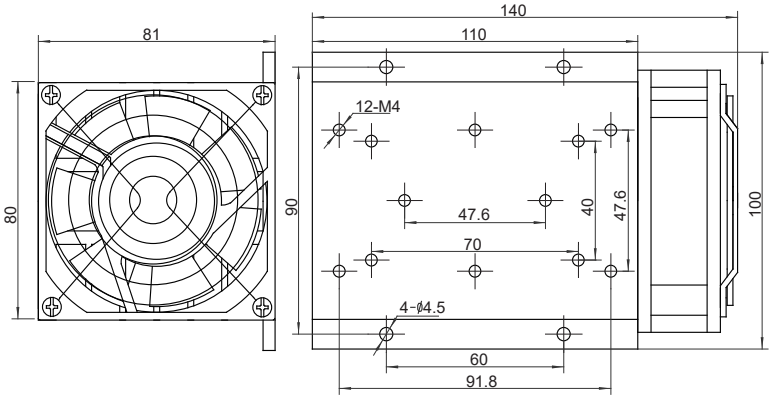

KHS-C110-F□□□

Outline Dimensions

D Series:

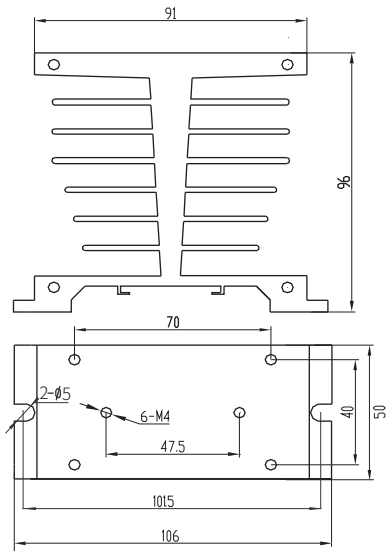

KHS-D50

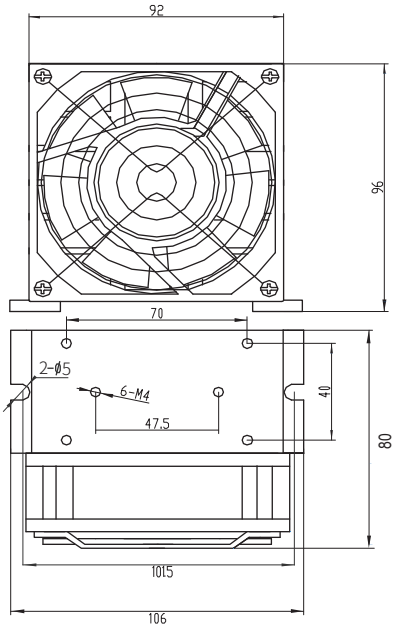

KHS-D50-F□□□

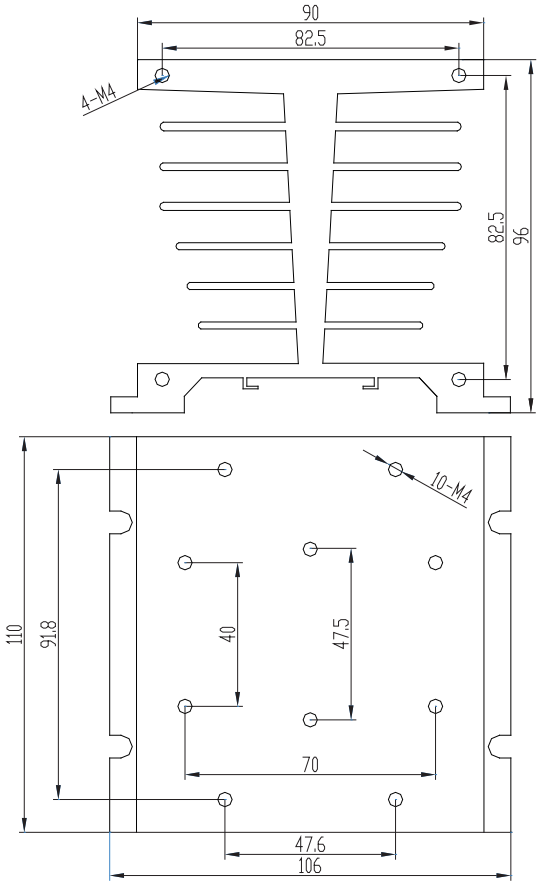

KHS-D110

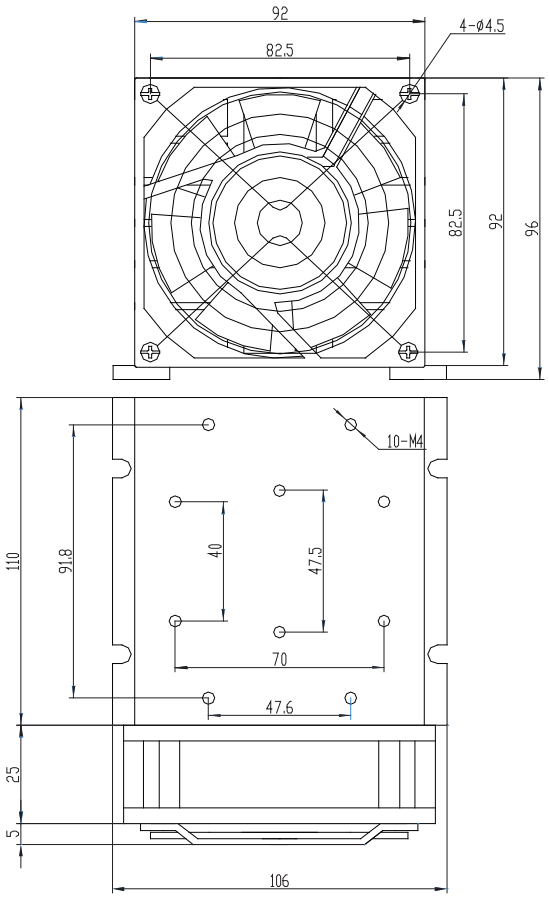

KHS-D110-F□□□

Outline Dimensions

E Series:

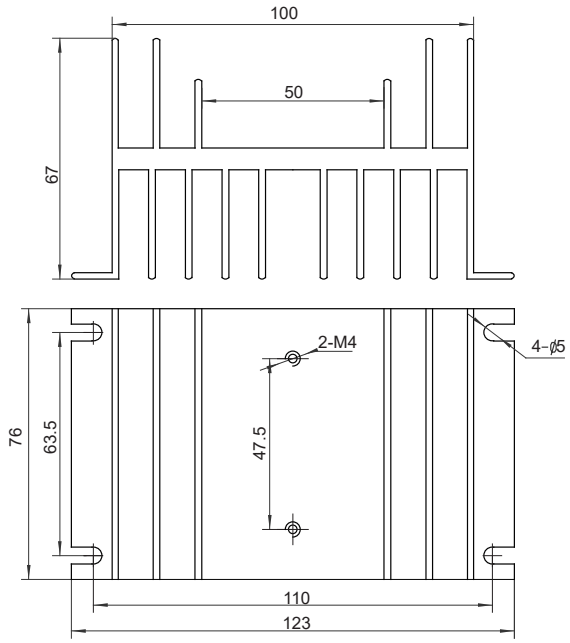

KHS-E76

F Series:

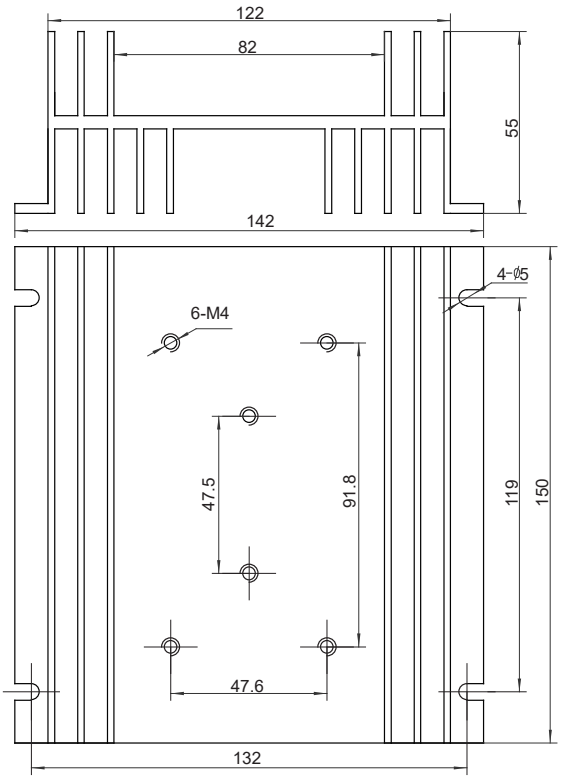

G Series:

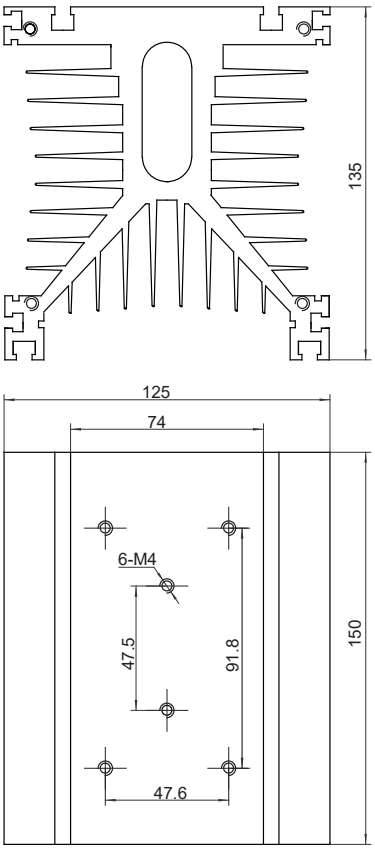

KHS-G150

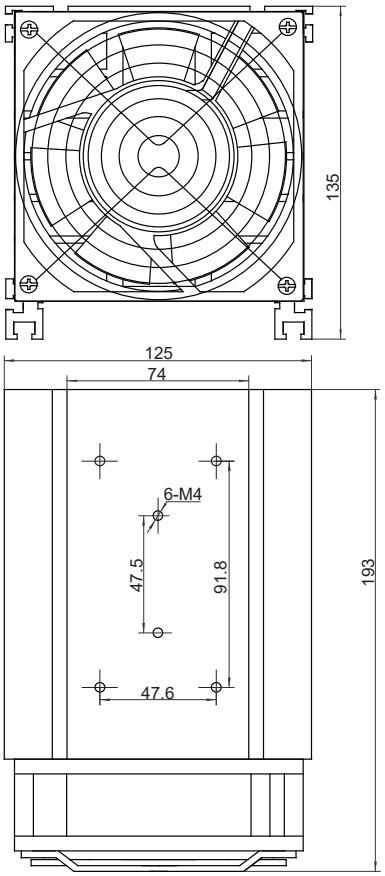

KHS-G150-F□□□

Trademark Change Notification

Due to the company's strategic development needs, Xiamen Kudom Electronics Technology Co., Ltd will be acquired by i-Autoc (Xiamen) Investment Co., Ltd from 1st of July 2019. After the acquisition, all the products by Xiamen Kudom Electronics Technology Co., will no longer use Kudom trademark, but use i-Autoc trademark. The details of the change are as follows.

The original trademark KUDOM will be changed to i-Autoc. The original trademark KUDOM will still be used until 30th June 2019.

This is a change to the trademark only, the Company Name, Manufacturing Location, Management Team, Product Part Numbers and Safety Approval Licence Numbers (cUL, TUV, CCC, S-mark Etc) are to remain the same.