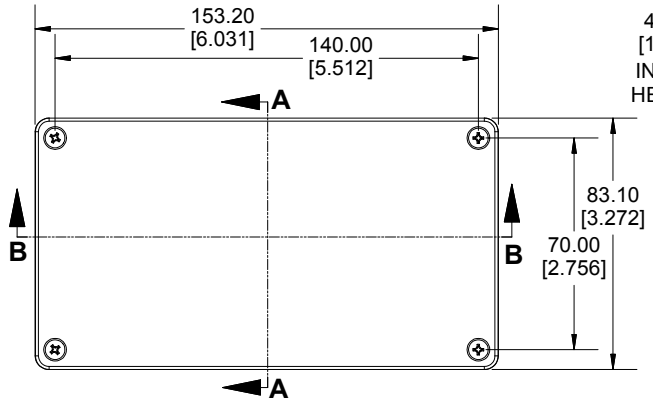

TOP VIEW

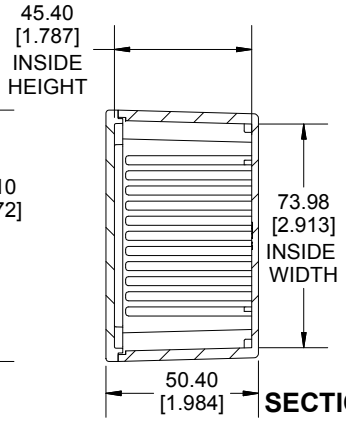

SECTION A-A
END VIEW

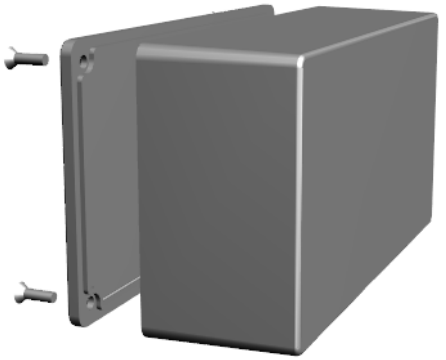

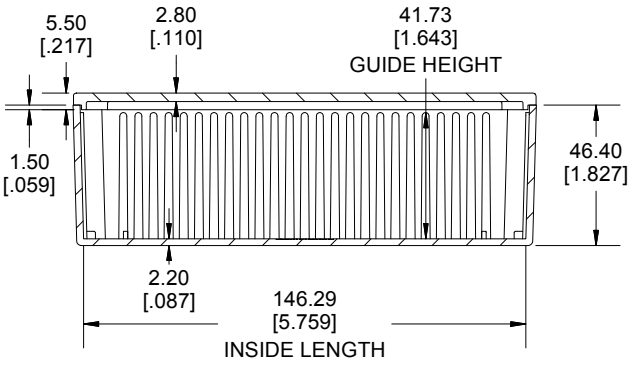

SECTION B-B
SIDE VIEW

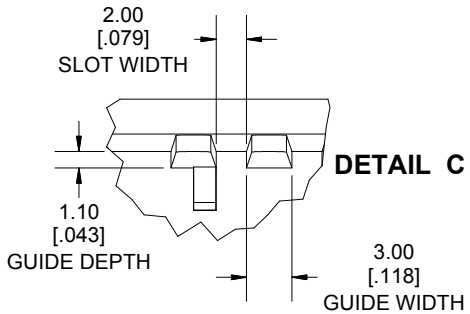

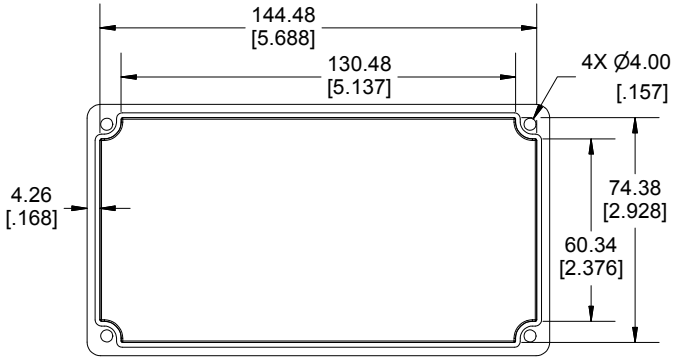

INSIDE LID

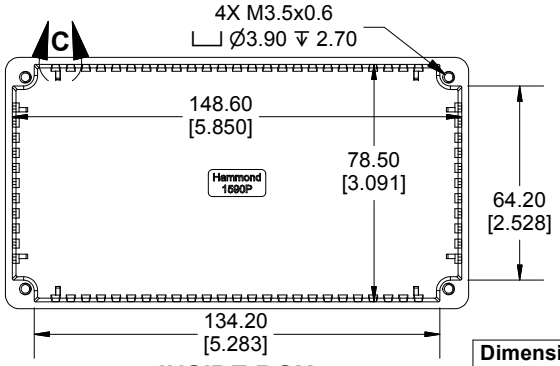

INSIDE BOX

Dimensions:
mm
[inches]

Enclosures can be Factory Modified (Milling, Drilling, Printing etc.)
Contact Factory mjm@hammondmfg.com for quotes
Solid models of this enclosure available in STEP or IGES.
(Part number and text placement/orientation on our products are subject to change, we do not recommend using them as a locating reference for modification purposes)

NOTE
Purchased assembly includes box, lid and 4 cover screws.
Box and lid are made from Diecast Aluminum Alloy.
Silicone Gasket supplied with liquid resistant enclosure.
Recommended Torque: 50-55 cN.m [71-78 ozf.in]
Recommended Torque with Gasket : 25-30 cN.m [36-43 ozf.in]

PART NUMBERS	
1590P Enclosure	
Natural Finish Enclosure	1590P
Black Textured Enclosure	1590PBK
1590P Liquid Resistant Enclosure (Silicone Gasket)	
Natural Finish Enclosure	1590WP
Black Textured Enclosure	1590WPBK
ACCESSORIES	
Liquid Resistant Cover Screws	
Stainless Steel Cover Screws (Pkg 100) [M3.5 x 12mm, With O-Ring]	1550WMS100
Black Stainless Steel Cover Screws (Pkg 100) [M3.5 x 12mm, With O-Ring]	1550WMS100BK
Standard Cover Screws	
Plated Cover Screws (Pkg 100) [M3.5 x 12mm]	1550MS100
Black Cover Screws (Pkg 100) [M3.5 x 12mm]	1550MS100BK

HAMMOND MANUFACTURING®

1590P

www.hammondmfg.com