KG5057

Capacitive sensor

KG-3008-BPKG/NI/US

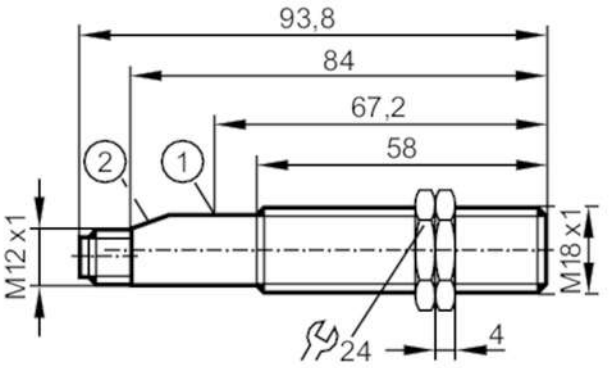

1 potentiometer
2 LED

Product characteristics		
Electrical design		PNP
Output function		normally open
Sensing range	[mm]	8
Housing		threaded type
Dimensions	[mm]	M18 x 1 / L = 93.8
Electrical data		
Operating voltage	[V]	10...36 DC
Current consumption	[mA]	< 10 (24 V DC) / < 15 (36 V DC)
Protection class		II
Reverse polarity protection		yes
Outputs		
Electrical design		PNP
Output function		normally open
Max. voltage drop switching output DC	[V]	2.5
Permanent current rating of switching output DC	[mA]	250
Switching frequency DC	[Hz]	50
Short-circuit proof		yes
Overload protection		yes
Detection zone		
Sensing range	[mm]	8
Sensing range adjustable		yes
Factory setting sensing range	[mm]	8
Real sensing range Sr	[mm]	8 ± 10 %
Operating distance	[mm]	0...6.5
Accuracy / deviations		
Correction factor		glass: 0.4 / water: 1 / ceramics: 0.2 / PVC: 0.2

KG5057

Capacitive sensor

KG-3008-BPKG/NI/US

Hysteresis	[% of Sr]	1...15	
Switch point drift	[% of Sr]	-15...15	
Operating conditions			
Ambient temperature	[°C]	-25...80	
Protection		IP 67	
Increased immunity		yes	
Tests / approvals			
EMC		EN 60947-5-2	
MTTF	[years]	647	
Mechanical data			
Weight	[g]	29.4	
Housing		threaded type	
Mounting		non-flush mountable	
Dimensions	[mm]	M18 x 1 / L = 93.8	
Thread designation		M18 x 1	
Materials		PBT	
Displays / operating elements			
Display		switching status	1 x LED, yellow
Accessories			
Items supplied		lock nuts: 2	
Remarks			
Pack quantity		1 pcs.	
Electrical connection - plug			

Connector: 1 x M12; coding: A



Connection

