TCC811

Temperature transmitter

TCC050K1EC01-A-DKG/US

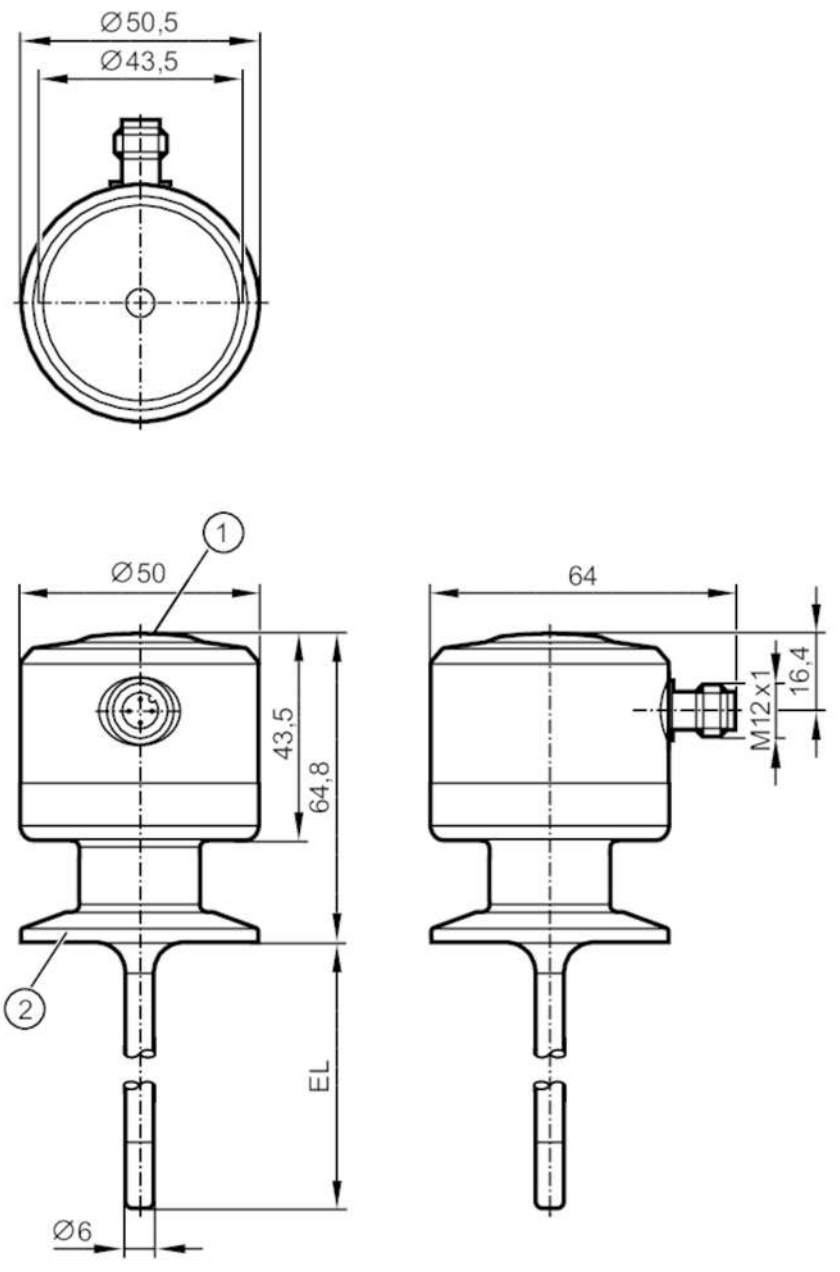

1 LED
2 Process connection

Product characteristics			
Number of inputs and outputs		Number of digital outputs: 1; Number of analogue outputs: 1	
Measuring range		-25...160 °C	-13...320 °F
Communication interface		IO-Link	
Process connection		Clamp DN25...DN40 (1...1,5") DIN 32676 (ISO 2852)	
Installation length EL	[mm]	50	
Application			
Special feature		Gold-plated contacts	
Measuring element		1 x Pt 1000	

TCC811

Temperature transmitter

TCC050K1EC01-A-DKG/US

Reference element		1 x NTC	
Media		liquids and gases	
Pressure rating		160 bar	16 MPa
Electrical data			
Operating voltage	[V]	18...32 DC; ("supply class 2" to cULus)	
Current consumption	[mA]	10; (24 V)	
Protection class		III	
Reverse polarity protection		yes	
Power-on delay time	[s]	6	
Integrated watchdog		yes	
Inputs / outputs			
Number of inputs and outputs		Number of digital outputs: 1; Number of analogue outputs: 1	
Outputs			
Total number of outputs		2	
Output signal		analogue signal; IO-Link; calibration check status	
Electrical design		PNP/NPN	
Number of digital outputs		1	
Output function		normally closed; (diagnostic signal)	
Max. voltage drop switching output DC	[V]	2	
Permanent current rating of switching output DC	[mA]	100	
Diagnostic output		calibration check status and error diagnostics	
Number of analogue outputs		1	
Analogue current output	[mA]	4...20	
Max. load	[Ω]	(Ub - 15 V) x 50	
Short-circuit protection		yes	
Type of short-circuit protection		pulsed	
Overload protection		yes	
Measuring/setting range			
Probe length L	[mm]	50	
Measuring range		-25...160 °C	-13...320 °F
Note on measuring range		scalable	
Factory setting		-10...150 °C / 14...302 °F	
Calibration check limit	[K]	0.5...3	
In steps of	[K]	0.05	
Resolution			
Resolution of analogue output	[K]	0.05	
Accuracy / deviations			
Precision analogue output	[K]	± 0,2	
Precision IO-Link	[K]	± 0,2	
Temperature coefficient analogue output		< ± 0,02; (in case of deviation from the reference condition 25 ± 5 °C)	

TCC811

Temperature transmitter

TCC050K1EC01-A-DKG/US

[% of the span / 10 K]			
Temperature coefficient IO-Link [% of the span / 10 K]	< ± 0,01; (in case of deviation from the reference condition 25 ± 5 °C)		
Response times			
Dynamic response T05 / T09 [s]	1,5 / 4		
Software / programming			
Parameter setting options	Display unit; scaling of the analogue output; calibration check limit; switching logic diagnostic output; simulation mode		
Interfaces			
Communication interface	IO-Link		
Transmission type	COM2 (38,4 kBaud)		
IO-Link revision	1.1		
SDCI standard	IEC 61131-9 CDV		
Profiles	Digital Measuring Sensor, Common Profile, Blob Transfer		
SIO mode	yes		
Required master port type	A		
Process data analogue	1		
Process data binary	1		
Min. process cycle time [ms]	4.4		
IO-Link resolution temperature [K]	0.01		
Supported DeviceIDs	**Type of operation**	**DeviceID**	
	default	1129	
Operating conditions			
Ambient temperature [°C]	-25...70		
Note on ambient temperature	max. internal device temperature: 125 °C		
Storage temperature [°C]	-40...100		
Protection	IP 68; IP 69K		
Tests / approvals			
EMC	DIN EN 61000-6-2		
	DIN EN 61000-6-3		
Shock resistance	DIN EN 68000-2-27	50 g (11 ms)	
Vibration resistance	DIN EN 60068-2-6	35 g (10...2000 Hz)	
MTTF [years]	329		
Note on approval	factory certificate available as download at www.factory-certificate.ifm		
UL approval	UL Approval no.	K021	
	File number UL	E217884	
Mechanical data			
Weight [g]	352.3		
Housing	cylindrical		
Dimensions [mm]	Ø 50 / L = 114.8		
Materials	stainless steel (316L/1.4404); PEI; FKM; PFA		
Materials (wetted parts)	stainless steel (316L/1.4404); PEEK		
Process connection	Clamp DN25...DN40 (1...1,5") DIN 32676 (ISO 2852)		

TCC811

Temperature transmitter

TCC050K1EC01-A-DKG/US

Surface characteristics Ra/Rz of the wetted parts		Ra: < 0.8
Probe diameter	[mm]	6
Installation length EL	[mm]	50

Remarks

Remarks	MS = set measuring span
	operating voltage "supply class 2" according to cULus
Pack quantity	1 pcs.

Electrical connection

Connector: 1 x M12; coding: A; Contacts: gold-plated



Connection

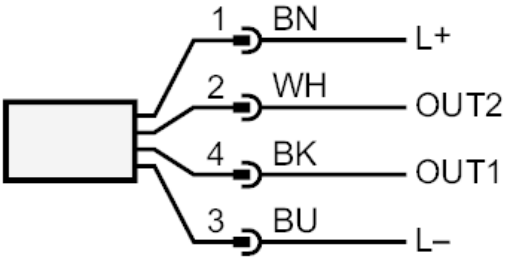

OUT2: analogue output
OUT1: Diagnostic output / IO-Link