

Image may differ from product. See technical specification for details.

FRB 10/110

Locating (stabilizing) ring

A bearing in the locating position must be secured axially in the housing. If the bearing seat in the housing and the bearing width do not match, locating (stabilizing) rings are required. Typically, two locating rings are required per housing. One ring should be placed on each side of the bearing. If only one locating ring is required, it should be installed on the same side as the lock nut.

Overview

Dimensions

Outside diameter	110 mm
Inside diameter	101 mm
Width	10 mm

Properties

Accessory type	Locating ring

Logistics

Product net weight	0.068 kg
eClass code	23-05-17-90
UNSPSC code	31171519

Technical specification

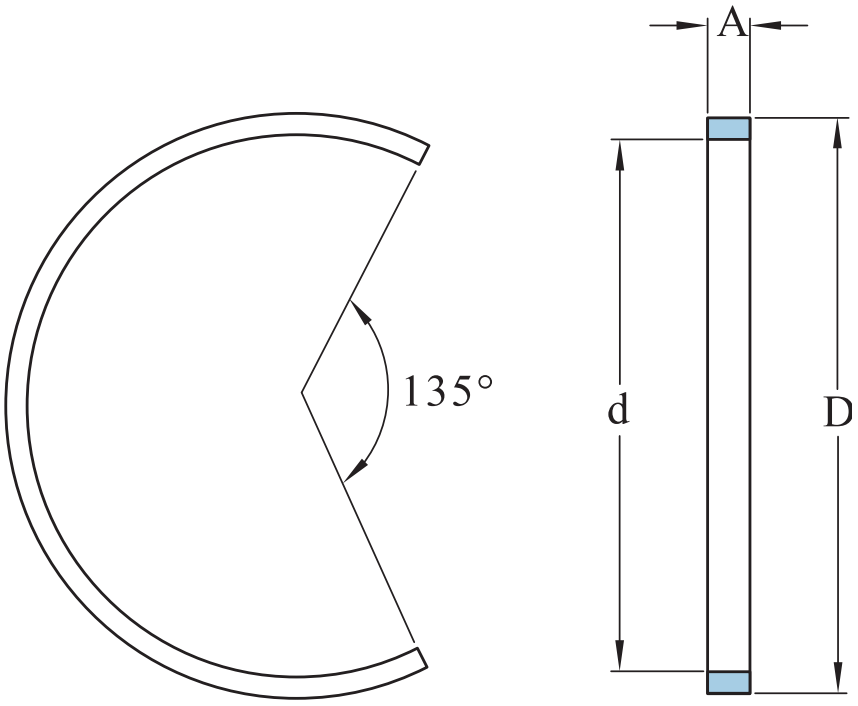

Dimensions

D	110 mm	Outside diameter
d	101 mm	Inside diameter
A	10 mm	Width

Terms of use