HF105F-4 MINIATURE HIGH POWER RELAY

c UL us
File No.:E134517

VDE
File No.:40025518 (DC type)

CQC
File No.:CQC09002031229(DC type)



Features

- 40A switching capability
- 2.5kV dielectric strength (between coil and contacts)
- Heavy load up to 7200VA
- UL insulation system: Class F available
- Environmental friendly product (RoHS compliant)
- Outline Dimensions: (50 x 27.2 x 27.8) mm

CONTACT DATA

Contact arrangement	1A	1B	1C (NO)	1C (NC)
Contact resistance	50mΩ max.(at 1A 24VDC)			
Contact material	$AgSnO_2$, AgCdO			
Max. switching capacity	7200VA/560W	3600VA/280W	4800VA/560W	2400VA/280W
Max. switching voltage	277VAC/28VDC			
Max. switching current	40A	15A	20A	10A
HF105F-4 rating	30A 240VAC 20A 28VDC	15A 240VAC 10A 28VDC	20A 240VAC 20A 28VDC	10A 240VAC 10A 28VDC
HF105F-4L rating	25A 240VAC 20A 28VDC	15A 240VAC 10A 28VDC	20A 240VAC 20A 28VDC	10A 240VAC 10A 28VDC
Mechanical endurance	1×10^7OPS			
Electrical endurance	1H type(Non-plastic sealed): 1×10^5OPS (28A 277VAC, Resistive load, AgCdO, Room temp., 1s on 9s off)			

CHARACTERISTICS

Insulation resistance		1000MΩ (at 500VDC)
Dielectric strength	Between coil & contacts	2500VAC 1min
	Between open contacts	1500VAC 1min
Operate time (at nomi. volt.)		DC type: 15ms max.
Release time (at nomi. volt.)		DC type: 10ms max.
Ambient temperature		DC: -55˚C to 85˚C AC: -55˚C to 60˚C
Shock resistance	Functional	98m/s²
	Destructive	980m/s²
Vibration resistance		10Hz to 55Hz 1.5mm DA
Humidity		5% to 85% RH
Termination		QC
Unit weight		Approx. 36g
Construction		Plastic sealed, Dust protected

Notes: 1) For plastic sealed type, the venting-hole should be opened in test.
2) The data shown above are initial values.
3) Please find coil temperature curve in the characteristic curves below.
4) UL insulation system: Class F, Class B.

COIL

Coil power	DC type: Approx. 900mW; AC type: Approx. 2VA

SAFETY APPROVAL RATINGS

UL/ CUL	1 Form A		$AgSnO_2$ AgCdO	30A 277VAC 40A 277VAC 2HP 250VAC 1HP 125VAC
			AgCdO	30A 28VDC 28A 277VAC 277VAC(FLA=20)(LRA=60)
	1 Form B		AgCdO	15A 277VAC 10A 28VDC 1/2HP 250VAC 1/4HP 125VAC 277VAC(FLA=10)(LRA=33)
	1 Form C	NO	$AgSnO_2$ AgCdO	30A 277VAC 2HP 250VAC 1HP 125VAC
			AgCdO	20A 277VAC 20A 28VDC 277VAC(FLA=20)(LRA=60)
		NC	$AgSnO_2$ AgCdO	20A 277VAC 1/2HP 250VAC 1/4HP 125VAC
			AgCdO	10A 277VAC 10A 28VDC 277VAC(FLA=10)(LRA=33)

Notes: 1) All values unspecified are at room temperature.
2) Only typical loads are listed above. Other load specifications can be available upon request.

COIL DATA

at 23˚C

DC type

Nominal Voltage VDC	Pick-up Voltage VDC max.	Drop-out Voltage VDC min.	Max. Voltage VDC *	Coil Resistance Ω
5	3.75	0.5	6.5	27 x (1±10%)
6	4.50	0.6	7.8	40 x (1±10%)
9	6.75	0.9	11.7	97 x (1±10%)
12	9.00	1.2	15.6	155 x (1±10%)
15	11.25	1.5	19.5	256 x (1±10%)
18	13.50	1.8	23.4	380 x (1±10%)
24	18.00	2.4	31.2	660 x (1±10%)
48	36.00	4.8	62.4	2560 x (1±10%)
70	52.50	7.0	91	5500 x (1±10%)
110	82.50	11	143	13450 x (1±10%)

AC type

Nominal Voltage VAC	Pick-up Voltage VAC max.	Drop-out Voltage VAC min.	Max. Voltage VDC*	Coil Resistance Ω
12	9.6	2.4	15.6	25 x (1±10%)
24	19.2	4.8	31.2	100 x (1±10%)
120	96.0	24.0	156	2500 x (1±10%)
208	166.4	41	270.4	11000 x (1±10%)
220	176	44	286	13490 x (1±10%)
240	192	48	286	13490 x (1±10%)
277	220	54	360.1	15000 x (1±10%)

Notes: 1) When requiring pick-up voltage < 80% of nominal voltage, special order allowed.
2) The data shown above are initial values at 50Hz. When requiring 60Hz, special order allowed.
3) *Maximum voltage refers to the maximum voltage which relay coil could endure in a short period of time.

ORDERING INFORMATION

HF105F-4 / 018 D K -1H S T F (XXX)

Type	HF105F-4: 30A HF105F-4L: 25A	
Coil voltage	**DC:** 5VDC to 110VDC **AC:** 12VAC to 277VAC	
Coil voltage form	**D:** DC	**A:** AC
Coil terminal width	**K:** 4.8mm	**Nil:** 2.8mm
Contact arrangement	**1H:**1 Form A	**1D:**1 Form B **1Z:**1 Form C
Construction 1)	**S:** Plastic sealed	**Nil:** Dust protected
Contact material	**T:** $AgSnO_2$	**Nil:** AgCdO
Insulation standard	**F:** Class F	**Nil:** Class B
Special code3)	**XXX:** Customer special requirement	**Nil:** Standard

Notes: 1) We recommend dust protected types for a clean environment (free from contaminations like H_2S, SO_2, NO_2, dust, etc.). We suggest to choose plastic sealed types and validate it in real application for an unclean environment (with contaminations like H_2S, SO_2, NO_2, dust, etc.).
2) Contact is recommended for suitable condition and specifications if water cleaning or surface process is involved in assembling relays on PCB.
3) The customer special requirement express as special code after evaluating by Hongfa.

OUTLINE DIMENSIONS, WIRING DIAGRAM AND PC BOARD LAYOUT

Unit: mm

1 Form A

Outline Dimensions

Wiring Diagram

(Top view)

2.8mm Terminal width

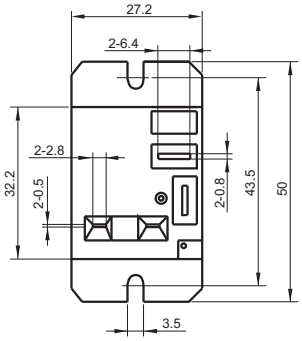

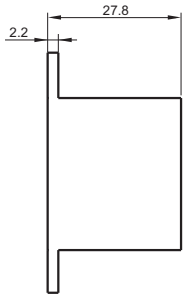

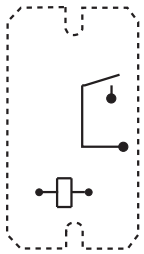

4.8mm Terminal width

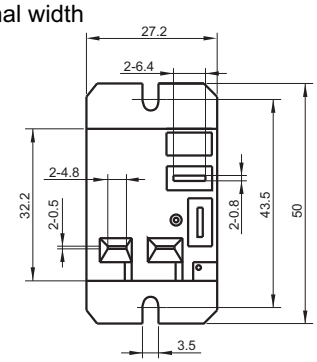

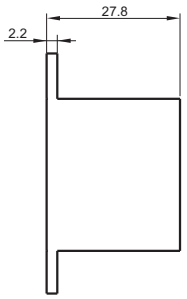

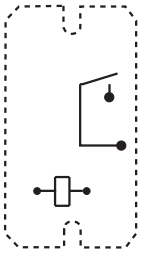

1 Form B

2.8mm Terminal width

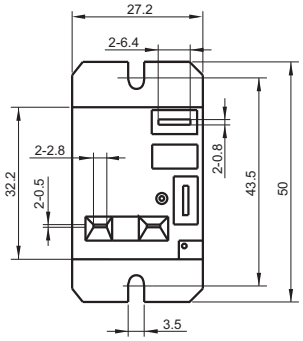

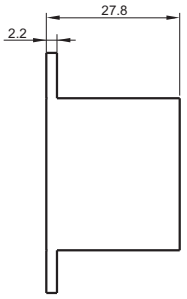

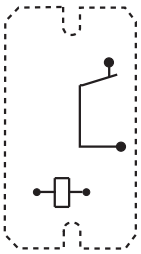

4.8mm Terminal width

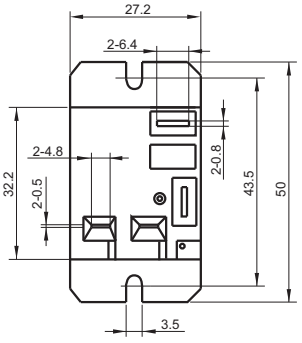

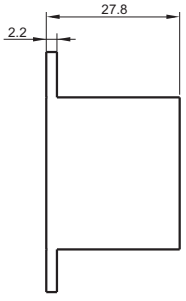

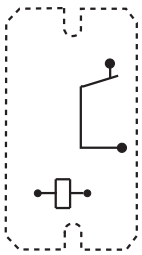

OUTLINE DIMENSIONS, WIRING DIAGRAM AND PC BOARD LAYOUT

Unit: mm

1 Form C

Outline Dimensions

Wiring Diagram
(Top view)

2.8mm Terminal width

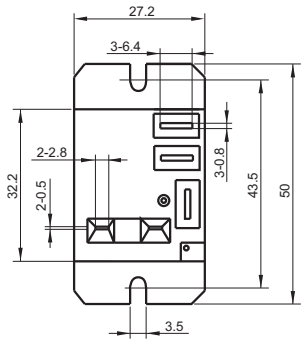

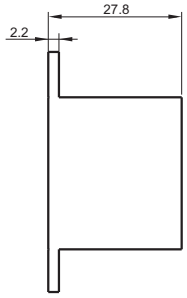

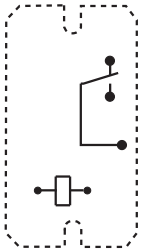

4.8mm Terminal width

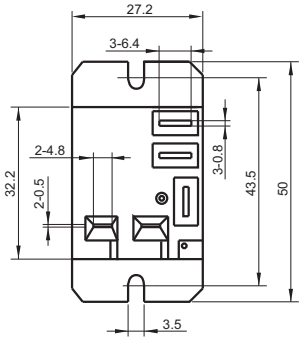

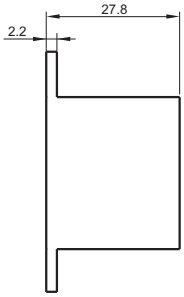

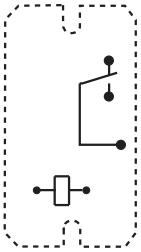

Remark: In case of no tolerance shown in outline dimension: outline dimension ≤1mm, tolerance should be ±0.2mm; outline dimension >1mm and ≤5mm, tolerance should be ±0.3mm; outline dimension >5mm, tolerance should be ±0.4mm.

CHARACTERISTIC CURVES

MAXIMUM SWITCHING POWER

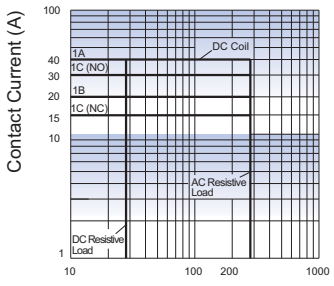

Contact Voltage (V)

ENDURANCE CURVE

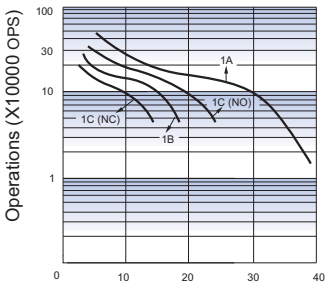

Contact Current (A)

Test conditions:
Resistive load, Dust protected,
AgCdO, Room temp., 1s on 9s off.

COIL TEMPERATURE RISE

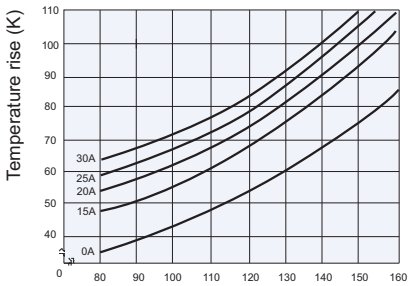

Percentage Of Nominal Coil Voltage

Disclaimer

The specification is for reference only. See to "Terminology and Guidelines" for more information. Specifications subject to change without notice. We could not evaluate all the performance and all the parameters for every possible application. Thus the user should be in a right position to choose the suitable product for their own application. If there is any query, please contact Hongfa for the technical service. However, it is the user's responsibility to determine which product should be used only.

© Xiamen Hongfa Electroacoustic Co., Ltd. All rights of Hongfa are reserved.