John Guest Product Data Sheet

15mm 18mm 22mm PM Range Stem Elbows

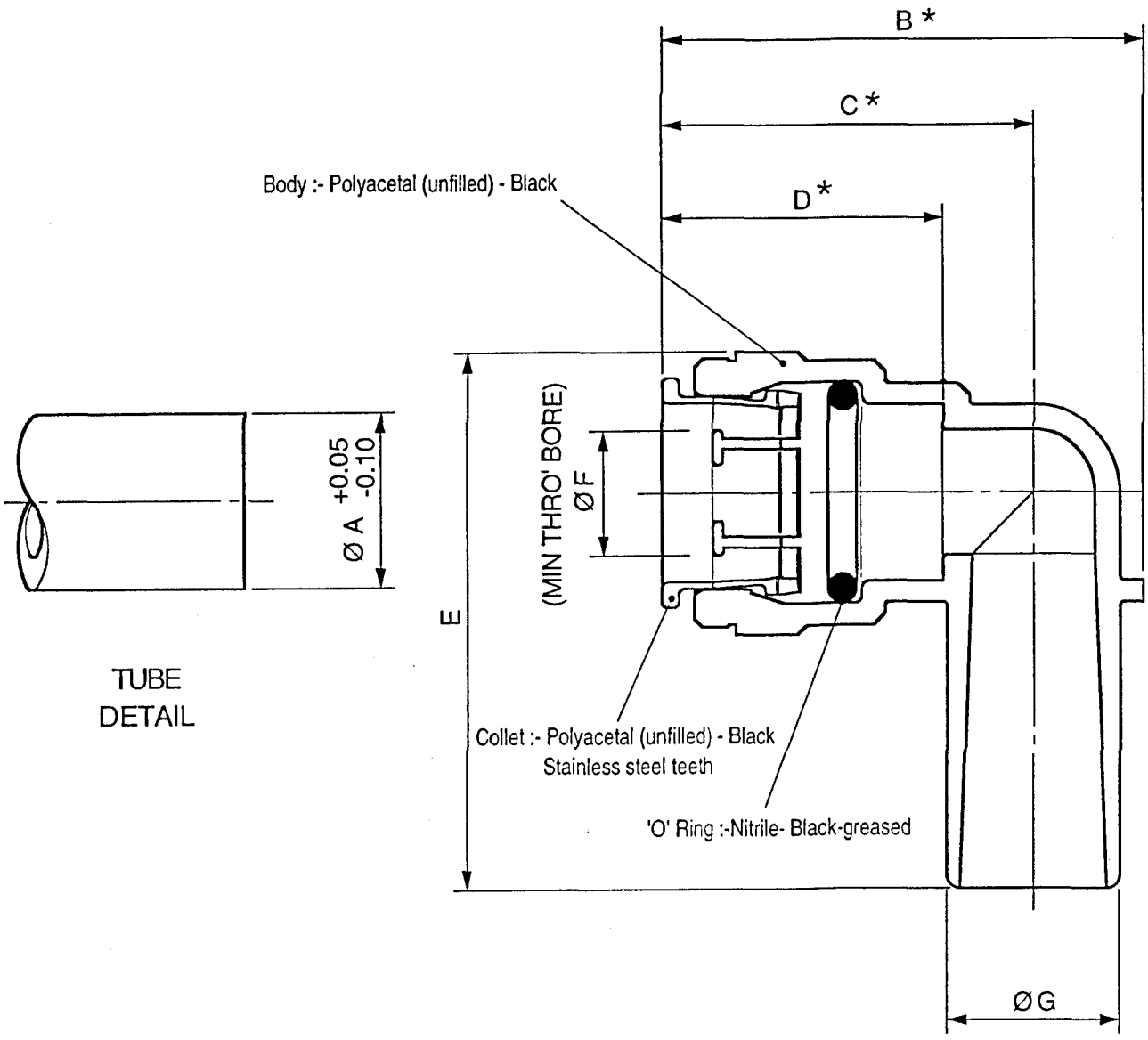

* These dims with collet in fully released position.

Product No.	Dim A	Dim B *	Dim C *	Dim D *	Dim E	Dim F	Dim G
PM221515E	15	51.7	42.2	28.7	58.0	10.0	15
PM221818E	18	52.2	41.0	31.0	62.2	13.0	18
PM222222E	22	58.7	44.7	33.8	67.0	15.5	22

The company has a policy of continuous research and development and reserves the right to amend without notice the specification and design of all products illustrated. For details of terms and conditions and any other technical enquiries, please contact our Customer Services Department.

C-5523-1406 ECN6117
ISSUE 3 24-06-99