



CONNECT AND PROTECT

RatiopacPRO

08/2022

nVent SCHROFF

Desk-top cases – RatiopacPro

OVERVIEW

MAIN KATALOG

Cabinets 1

Wall mounted cases 2

Accessories for cabinets and wall mounted cases . . 3

Climate control . . 4

Electronics cases 5

Subracks/ 19" chassis 6

Front panels, plug-in units 7

Systems 8

Power supply units 9

Backplanes 10

Connectors, front panel component system 11

Appendix 12





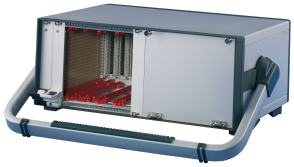





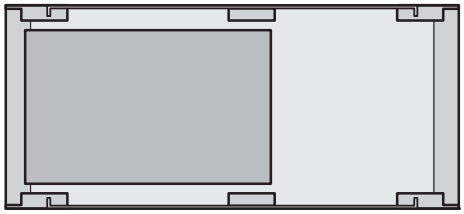

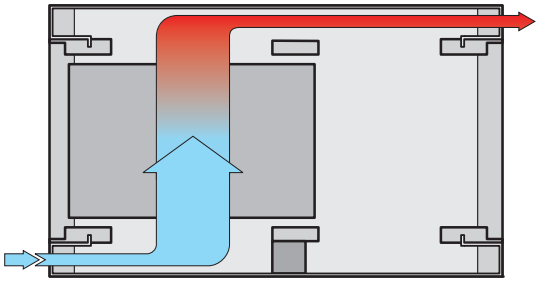

06801005

RATIOPACPRO

Designed for insertion/extractor handles in accordance with IEC 60297-3-102 and IEEE 1101.10 for CompactPCI and VME64x applications

RATIOPACPRO AIR

Designed for insertion/extractor handles in accordance with IEC 60297-3-102 and IEEE 1101.10 for CompactPCI and VME64x applications; 1 U extra for ventilation
(1/2 U top, 1/2 U bottom)

STANDARDS

- Inner and outer dimensions in accordance with:
  IEC 60297-3-101 / IEEE 1101.1
  IEC 60297-3-102 / IEEE 1101.10/11
- Type of protection IP20 in accordance with IEC 60529
- Earthing connections in accordance with:
  DIN EN 50178 / VDE 0160
  DIN EN 62368-1 / VDE 0805
  DIN EN 61010-1 / VDE 0411 part 1
  DIN EN 61010-1A2 / VDE 0411 part 1/A1
- EMC testing in accordance with VG 95373 part 15



06812001

Case with mounting plate

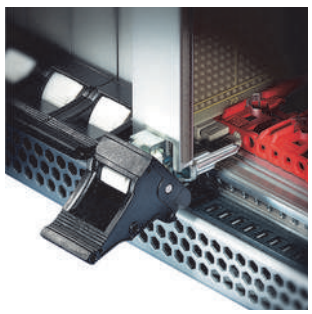

06800015

Prepared for CompactPCI and VME64x applications

Desk-top cases – RatiopacPro

OVERVIEW

THE UNIVERSAL CASE WITH 19" COMPATIBLE DIMENSIONS E.G. FOR COMPACTPCI, VME64X AND OTHER APPLICATIONS

- Base level of shielding in basic versions upwards, additional EMC shielding can be retrofitted
- Symmetrical construction, identical front and rear (identical board cage for ratiopacPRO and ratiopacPRO air)
- Converts simply from desktop to 19" rack-mounted case and back
- No visible screws; cladding parts removable without tools



RATIOPACPRO

- Case with cover strip, front handles or 19" brackets (height 2 Up to 6 U)
- Complete case with cover strip and pre-mounted components, with basic shielding (height 3 U, 6 U), additional EMC shielding retrofittable
- Tower case (width 4 U)



06803002

RATIOPACPRO AIR

- ratiopacPRO air with additional 1 U height for ventilation
- Case with cover strips, front handles or 19" brackets (height 4 U, 5 U, 7 U)
- Complete case with cover strips and pre-mounted components, with basic shielding (height 4 U, 7 U), additional EMC shielding retrofittable

SERVICEPLUS

e.g. modifications (special colours or sizes)
e.g. custom solutions (cut-outs in top cover, base plate or side panels)
e.g. assembly service from 1 piece

Overview **5.6**

ratiopacPRO
Complete cases .. **5.8**
Dimensions **5.9**
Cases 5.10
Tower cases **5.12**

ratiopacPRO air
Cases **5.14**
Complete cases .. **5.13**
Dimensions **5.16**
Radial fan units .. **5.17**
EMC gasketing ... **5.18**

Accessories
Rear panels **5.20**
Front panels **5.22**
GND/earthing kit **5.22**
Feet **5.23**
Air filters **5.24**
Compartment seals. **5.24**
Front handles 5.24
19" brackets **5.25**
Cable holder. **5.26**
Strap handles **5.26**
Tip-up carrying handles **5.27**
Assembly kit. **5.28**
Fitting position of horizontal rails ... **5.29**
Horizontal rails. .. **5.31**
Threaded inserts, perforated strips, insulation strips .. **5.35**
Z-rails, perforated rails. **5.35**
Divider plates **5.36**
Mounting plates .. **5.37**
Horizontal board assembly **5.38**
Combined mounting **5.39**
Guide rails and ESD clips **5.40**

Desk-top cases – RatiopacPro

RATIOPACPRO COMPLETE CASES



06812003

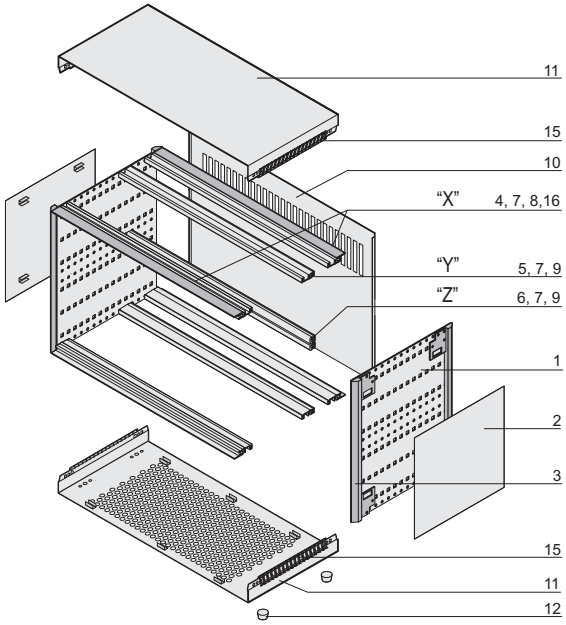

01802050

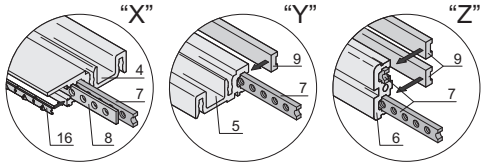

01808055

3 U

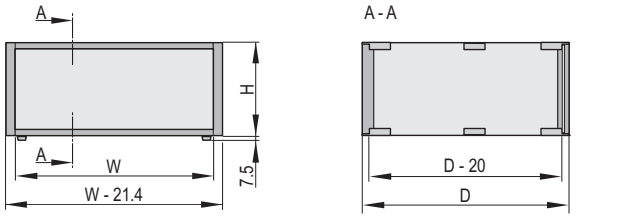

01808051

6 U

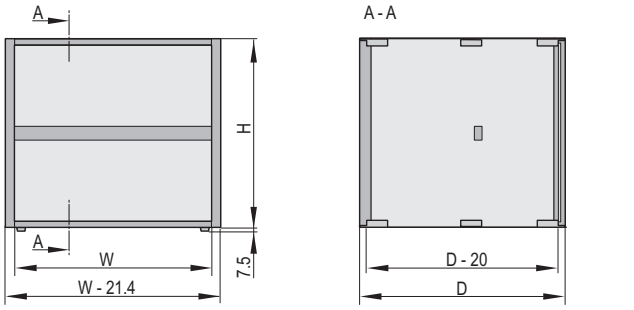

01808052

- Desk-top enclosure with pre-configured components, in accordance to IEC 60297-3-101; prepared for 19" components, e.g. plug-in units and euroboards
- Ventilation slit in base plate
- Rear panel perforated

DELIVERY COMPRISES (in kit form)

Item	Qty without EMC	Qty with EMC	Description
1	2	2	Side panel, Al, 2 mm, passivated
2	2	2	Side plate, Al, 1 mm, visible surfaces RAL 9006
3	4	4	Cover strip, Al die-cast, RAL 7016, pre-fitted only on EMC version
4	4	4	Horizontal rail, type H-LD, Al, visible surfaces RAL 7016
5	2	2	Horizontal rail, centre (top/bottom), type H-ST, Al
6	1	1	Horizontal rail, centre (on 6 U only), type ST, Al
7	6/8	6/8	3 U/6 U: threaded inserts, St, pre-mounted, for indirect backplane mounting with insulation strips
8	–	4	Perforated strip, Al, 1 mm, pre-fitted
9	4	4	Insulation strip, PBT, UL 94 V-0
10	1	1	Rear panel, perforated, Al, 2.5 mm
11	2	2	Top cover and base plate, Al, 1 mm, internal surfaces conductive, visible surfaces RAL 9006, with GND/ earthing connection, base plate with honeycomb grid ventilation
12	4	4	Case foot with anti-slip protection, UL 94 V-0, PC black
14	–	1	EMC support profile for side panel, pre-mounted (kit)
15	–	4	EMC contact strip for cover plate, pre-mounted (kit)
16	–	4	EMC contact strip front panel - horizontal rails
17	1	1	GND/earthing kit, assembly kit

ORDER INFORMATION

Height H U	Width W HP	Depth D mm	Unshielded Part no.	EMC shielded Part no.
3	28	255.5	**24572-001**	**24572-050**
3	42	255.5	**24572-002**	**24572-051**
3	42	315.5	**24572-003**	**24572-052**
3	63	315.5	**24572-004**	**24572-053**
3	84	315.5	**24572-005**	**24572-054**
3	84	375.5	**24572-006**	**24572-055**
3	84	435.5	**24572-007**	**24572-056**
6	42	315.5	**24572-015**	**24572-064**
6	63	315.5	**24572-016**	**24572-065**
6	84	315.5	**24572-017**	**24572-066**
6	84	375.5	**24572-018**	**24572-067**
6	84	435.5	**24572-019**	**24572-068**

NOTE

- Horizontal rail at front bottom (3U) and bottom and top (6U) with perforation. Prepared for IEEE applications (insertion- / extraction handles).
- Dimension drawings and mounting depths see page 5.9
- Components see page 5.18
- Front handles and 19" mounting brackets from page 5.24
- Guide rails from page 5.40

Desk-top cases – RatiopacPro

DIMENSION DRAWINGS RATIOPACPRO

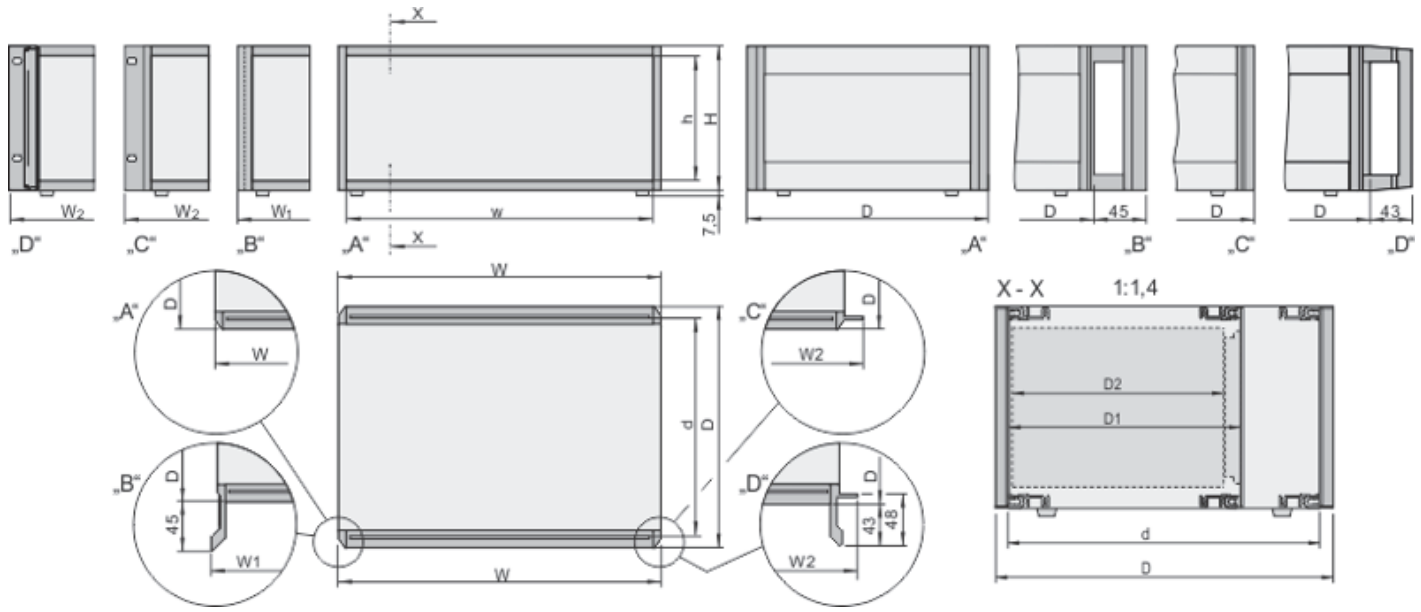

rppr6637

RatiopacPRO with A - bezel; B - front handle; C - 19" mounting bracket; D - 19" mounting bracket with front handle

Dimensions table RatiopacPRO

Height			Width				
H		h	w	W	w1	w2	w
in U	in mm	in mm	in HP	in mm	in mm	in mm	in mm
2	88.10	67.90	28	164.42	177.62	198.12	142.82
			42	235.54	248.74	269.24	213.94
			63	342.42	355.42	375.92	320.62
			84	448.90	462.10	482.60	427.30
3	132.55	112.35	28	164.42	177.62	198.12	142.82
			42	235.54	248.74	269.24	213.94
			63	342.42	355.42	375.92	320.62
			84	448.90	462.10	482.60	427.30
4	177.00	156.80	28	164.42	177.62	198.12	142.82
			42	235.54	248.74	269.24	213.94
			63	342.42	355.42	375.92	320.62
			84	448.90	462.10	482.60	427.30
5	221.45	201.25	28	164.42	177.62	198.12	142.82
			42	235.54	248.74	269.24	213.94
			63	342.42	355.42	375.92	320.62
			84	448.90	462.10	482.60	427.30
6	265.90	245.70	28	164.42	177.62	198.12	142.82
			42	235.54	248.74	269.24	213.94
			63	342.42	355.42	375.92	320.62
			84	448.90	462.10	482.60	427.30

Components mountable in 15 mm depth grid

Depth			
D	d	D1	d2
Total depth in mm	Useable depth in mm	Plug-in depth in mm	Board depth in mm
255.5	235.5	175.5	160
		235.5	220
315.5	295.5	175.5	160
		235.5	220
		295.5	280
375.5	355.5	175.5	160
		235.5	220
		295.5	280
		355.5	340
435.5	415.5	175.5	160
		235.5	220
		295.5	280
		355.5	340
495.5	475.5	175.5	160
		235.5	220
		295.5	280
		355.5	340

Part number in bold face type: ready for despatch within 2 working days
Part number in normal type: ready for despatch within 10 working days

Desk-top cases – RatiopacPro

RATIOPACPRO CASE

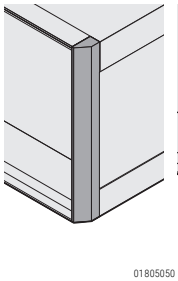

3a: Bezel

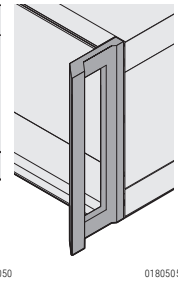

3b: Front handle

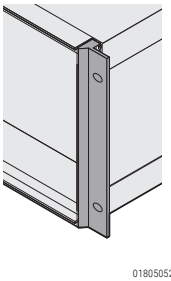

3c: 19" mounting bracket

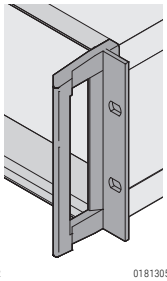

3d: 19" mounting bracket with front handle

- Cases for individual assembly with 19" standard components or specific internal mounting, e.g. with mounting plate
- Unshielded (EMC shielding retrofittable)
- Symmetrical design, identical front and rear side
- Four versions:
  - Bezels
  - Front handles
  - 19" mounting brackets
  - 19" mounting brackets with front handles
- For board depth 160 mm, 220 mm, 280 mm, and 340 mm (depending on case depth)

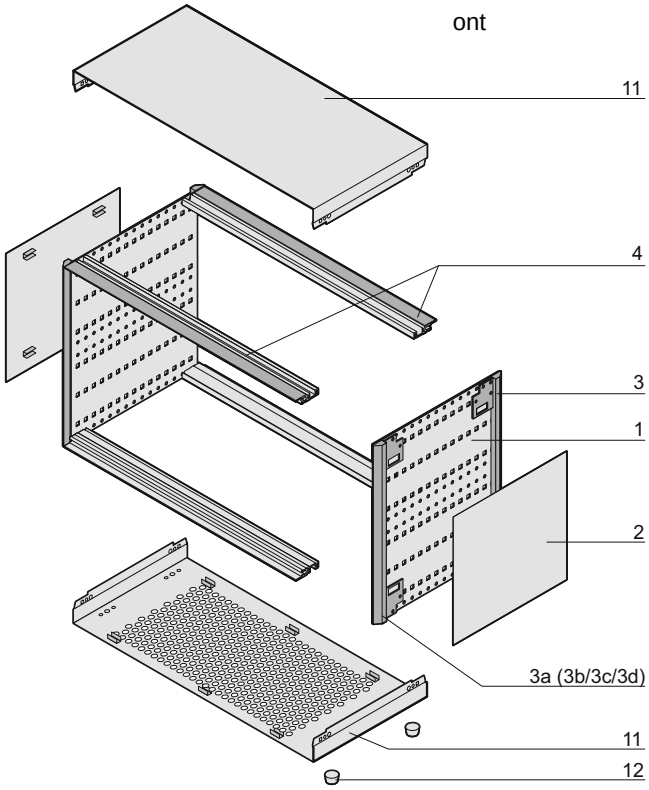

Drawing with front cover strip

DELIVERY COMPRISES (kit)

Item	Qty	Description
1	2	Side panel, Al, 2 mm, chromated
2	2	Side plate, Al, 1 mm, visible surfaces powder-coated, RAL 9006
3	2	Rear trim, Al die-cast, powder-coated, RAL 7016
3a	2	Bezel, Al die-cast, powder-coated, RAL 7016
3b	2	Front handle, Al die-cast, powder-coated, RAL 7016
3c	2	19" mounting bracket, Al diecast, powder-coated, RAL 7016
3d	2	19" mounting bracket with front handle, Al diecast, powder-coated, RAL 7016
4	4	Horizontal rail, type H-LD, Al, visible surfaces powder-coated, RAL 7016
11	2	Top cover and base plate, Al, 1 mm, inner sides conductive, visible surfaces powder-coated, RAL 9006, with GND/earthing connections, base plate with honeycomb grid ventilation
12	4	Case foot with anti-slip protection, UL 94 V-0, PC black
13	1	Fixing materials kit

3a, 3b, 3c or 3d according to selection

NOTE

- Order information, see following page
- Horizontal rail at front bottom (3U + 4U) and bottom and top (6U) with perforation.
  Prepared for IEEE applications (insertion- / extraction handles).

ORDER INFORMATION

Accessories	Part no.
Earthing kit CU wire, 1.5 mm^2, PVC sleeve, green/yellow, 1 kit	**24571-380**
	
Plastic tip-up foot silver, similar to RAL 9006, PU 4 pieces	**20603-001**
Plastic tip-up foot anthracite, similar to RAL 7016, 4 pieces	**20603-002**
Stacking aid silver, similar to RAL 9006, PA, UL 94 V-0, PU 4 pieces	**20603-004**
Stacking aid anthracite, similar to RAL 7016, PA, UL 94 V-0, PU 4 pieces	**20603-003**



Tip-Up Foot



Stacking Aid

Desk-top cases – RatiopacPro

RATIOPACPRO CASE



107888278

	Width W	Depth D	Case height H					
			2 U	3 U	4 U	5 U (1-3-1 U)	5 U (2-3U)	6 U
	HP	mm	Part no.	Part no.	Part no.	Part no.	Part no.	Part no.
			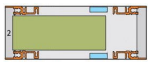	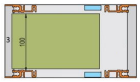	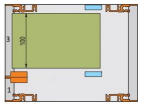	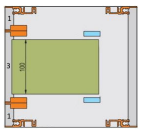	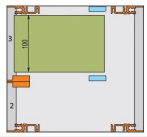	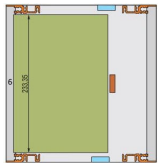
Cover strips	28	255.5	24572-500	24571-002	24571-050	24572-117	24572-261	24571-098
	28	315.5	24572-503	**24571-005**	24571-053	24572-120	24572-264	24571-101
	42	255.5	24572-510	**24571-014**	24571-062	24572-129	24572-273	24571-110
	42	315.5	**24572-513**	**24571-017**	24571-065	24572-132	24572-276	24571-113
	42	255.5	24572-514	24571-018	24571-066	24572-133	24572-277	24571-114
	63	255.5	24572-520	24571-026	24571-074	24572-141	24572-285	24571-122
	63	315.5	24572-523	**24571-029**	24571-077	24572-144	24572-288	24571-125
	63	375.5	24572-524	**24571-030**	24571-078	24572-145	24572-289	24571-126
	84	255.5	24572-530	24571-038	24571-086	24572-153	24572-297	24571-134
	84	315.5	24572-533	**24571-041**	24571-089	24572-156	24572-300	24571-137
	84	375.5	24572-534	**24571-042**	24571-090	24572-157	24572-301	24571-138
	84	435.5	24572-535	**24571-043**	**24571-091**	24572-158	24572-302	24571-139
RPPR6629	84	495.5	24572-536	24571-044	24571-092	24572-159	24572-303	24571-140
Front handles	28	255.5	–	**24571-702**	24571-750	24572-213	24572-357	24571-798
	28	315.5	–	24571-705	24571-753	24572-216	24572-360	24571-801
	42	255.5	–	**24571-714**	24571-762	24572-225	24572-369	24571-810
	42	315.5	–	**24571-717**	24571-765	24572-228	24572-372	24571-813
	42	375.5	–	24571-718	24571-766	24572-229	24572-373	24571-814
	63	255.5	–	24571-726	24571-774	24572-237	24572-381	24571-822
	63	315.5	–	**24571-729**	24571-777	24572-240	24572-384	24571-825
	63	375.5	–	24571-730	24571-778	24572-241	24572-385	24571-826
	84	255.5	–	24571-738	24571-786	24572-249	24572-393	24571-834
	84	315.5	–	**24571-741**	24571-789	24572-252	24572-396	24571-837
	84	375.5	–	**24571-742**	24571-790	24572-253	24572-397	24571-838
	84	435.5	–	24571-743	**24571-791**	24572-254	24572-398	24571-839
01805050	84	495.5	–	24571-744	24571-792	24572-255	24572-399	24571-840
19" mounting brackets	84	255.5	24572-570	**24571-438**	**24571-486**	24572-201	24572-345	24571-534
	84	315.5	**24572-573**	**24571-441**	24571-489	24572-204	24572-348	24571-537
	84	375.5	**24572-574**	**24571-442**	24571-490	24572-205	24572-349	24571-538
	84	435.5	**24572-575**	**24571-443**	**24571-491**	24572-206	24572-350	**24571-539**
	84	495.5	24572-576	24571-444	**24571-492**	24572-207	24572-351	24571-540
19" mounting brackets with front handles	84	255.5	24572-620	**24572-630**	**24572-640**	–	–	24572-660
	84	315.5	**24572-623**	**24572-633**	**24572-643**	–	–	**24572-663**
	84	375.5	**24572-624**	**24572-634**	**24572-644**	–	–	**24572-664**
	84	435.5	**24572-625**	**24572-635**	**24572-645**	–	–	**24572-665**
	84	495.5	24572-626	**24572-636**	**24572-646**	–	–	24572-666

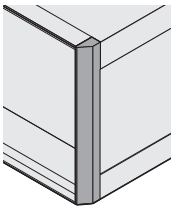

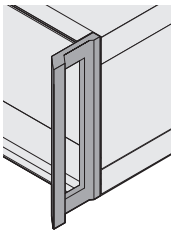

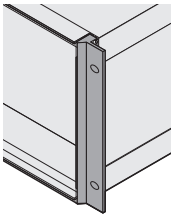

01805052

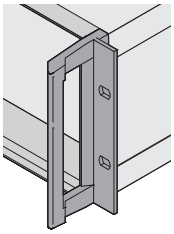

01813051

NOTE

- Dimension drawings and mounting depths see page 5.9
- Components see page 5.18

Part number in bold face type: ready for despatch within 2 working days
Part number in normal type: ready for despatch within 10 working days

Desk-top cases – RatiopacPro

RATIOPACPRO TOWER WITH 4 U WIDTH



06802001

- Symmetrical design, identical front and rear side
- Mounting space 4 U, 84 HP, depth 475 mm
- Case based on ratiopacPRO
- Unshielded (EMC shielding retrofittable)

DELIVERY COMPRISES (in kit form)

Item	Qty	Description
1	2	Base/top cover, Al, 2 mm, passivated
2	4	Horizontal rail, type H-LD, Al, visible surface powder-coated, RAL 7016
3	4	Cover, Al die-cast, RAL 7016
4	2	Lateral cover plate, Al, 1 mm, with GND/earthing connection, visible surfaces powder-coated, internal surface conductive, RAL 9006
5	1	Top cover plate, Al, 1 mm, visible surface powder-coated, RAL 9006
6	2	Case foot with anti-slip protection, Al, powder-coated, RAL 7016
7	1	Assembly kit

ORDER INFORMATION

Width U	Part no.
4	24571-395

NOTE

- Components see page 5.18

ORDER INFORMATION

Accessories	Part no.
Earthing kit CU wire, 1.5 mm^2, PVC sleeve, green/yellow, 1 kit	**24571-380**



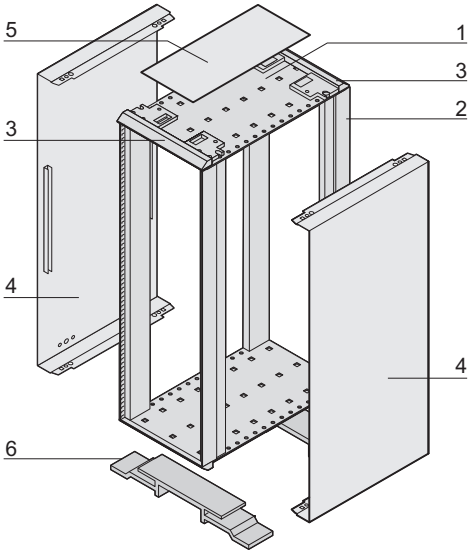

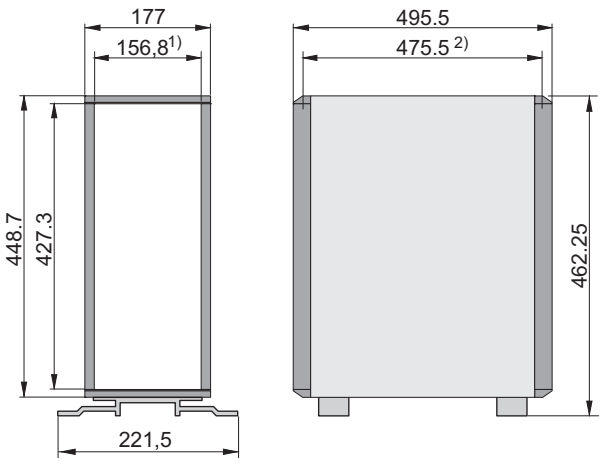

01802054

1) = open space between the horizontal rails mounting depth

2) = max. mounting depth

Desk-top cases – RatiopacProAir

RATIOPACPRO AIR COMPLETE CASES



06811001

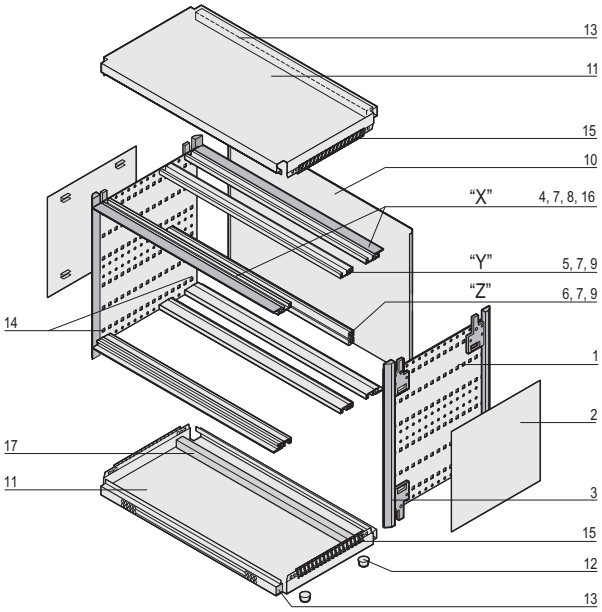

01802052

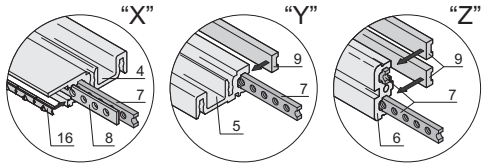

01808055

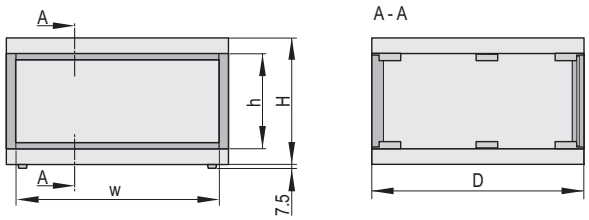

01808053

3 U

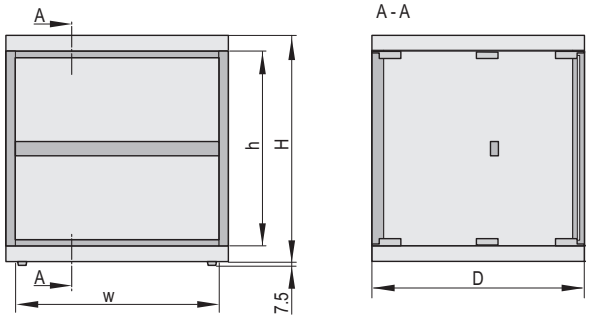

01808054

6 U

- The case has 2 x 1/2 U clearance for ventilation
- Case with cover strip; with pre-mounted components for euroboards and backplane with insulation strip; no visible screws
- Symmetrical design, identical front and rear honeycomb grid ventilation in top cover and base plate
- Available in two versions:
  - unshielded (EMC shielding retrofittable)
  - with EMC shielding fitted

DELIVERY COMPRISES (in kit form)

Item	Qty without EMC	Qty with EMC	Description
1	2	2	Side panel, Al, 2 mm, passivated
2	2	2	Side plate, Al, 1 mm, visible surface RAL 9006
3	4	4	Cover, die-cast zinc, RAL 7016, pre-mounted on EMC version only
4	4	4	Horizontal rail, type H-LD, Al, visible surface RAL 7016
5	2	2	Horizontal rail, centre (top/bottom), type H-ST, Al
6	1	1	Horizontal rail, centre (on 6 U only), type ST, Al
7	6/8	6/8	4 U/7 U: threaded inserts, St, pre-mounted, for indirect backplane mounting with insulation strips
8	–	4	Perforated strip, pre-mounted
9	4	4	Insulation strip, PBT, UL 94 V-0
10	1	1	Rear panel, Al, 2.5 mm
11	2	2	Top cover and base plate with honeycomb grid ventilation, Al, 1 mm, internal surface conductive, visible surface RAL 9006, with GND/earthing connection
12	4	4	Case foot with anti-slip protection, UL 94 V-0, PC, black
13	2	2	Air filter
14	–	1	EMC support profile for side panel, fitted (kit)
15	–	4	EMC contact strip for cover plate, pre-mounted (kit)
16	–	4	EMC contact strip front panel - horizontal rails
17	1	1	Compartment seal, PE foam, self-adhesive, temperature range -20 °C ... +85 °C
18	1	1	GND/earthing kit, assembly kit

ORDER INFORMATION

Case height H	PCB height h	Width w	Depth D	Unshielded	EMC shielded
U	U	HP	mm	Part no.	Part no.
4	3	28	255.5	**24572-025**	**24572-074**
4	3	42	255.5	**24572-026**	**24572-075**
4	3	42	315.5	**24572-027**	**24572-076**
4	3	63	315.5	**24572-028**	**24572-077**
4	3	84	315.5	**24572-029**	**24572-078**
4	3	84	375.5	**24572-030**	**24572-079**
4	3	84	435.5	**24572-031**	**24572-080**
7	6	42	315.5	**24572-040**	**24572-088**
7	6	63	315.5	**24572-041**	**24572-089**
7	6	84	315.5	**24572-042**	**24572-090**
7	6	84	375.5	**24572-043**	**24572-091**
7	6	84	435.5	24572-044	**24572-092**

NOTE

- Horizontal rail at front bottom (3/4U) and bottom and top (6/7U) with perforation. Prepared for IEEE applications (insertion- / extraction handles).
- Dimension drawings and mounting depths see page 5.16
- Components see page 5.18
- Front handles and 19" mounting brackets from page 5.24
- Guide rails from page 5.40

Part number in bold face type: ready for despatch within 2 working days
Part number in normal type: ready for despatch within 10 working days

Desk-top cases – RatiopacProAir

RATIOPACPRO AIR CASE

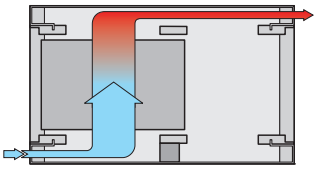

06801005

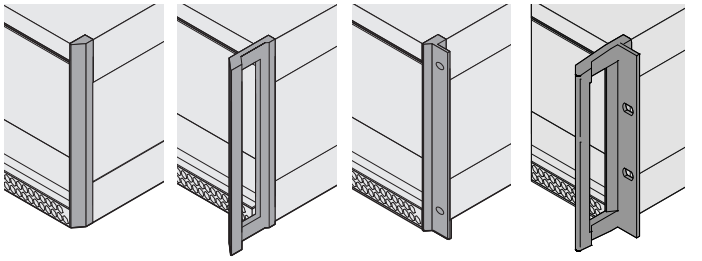

01805055 01805056 01805057 01813057

3a: Bezel | 3b: Front handle | 3c: 19" mounting bracket | 3d: 19" mounting bracket with front handle

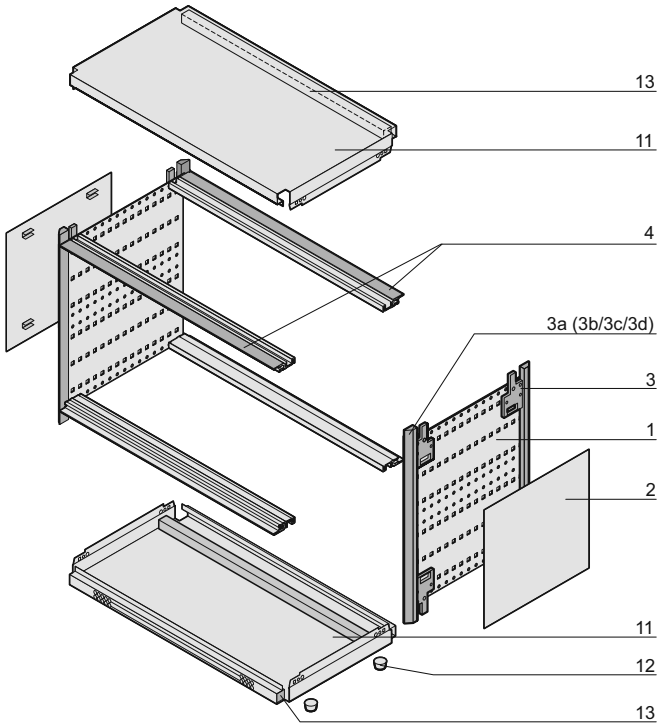

01813066

Drawing with front cover strip



Tip-Up Foot



Stacking Aid

- The case has 2 x 1/2 U clearances for ventilation beneath and above the board cage
- Cases for individual assembly with 19" standard components or specific internal mounting, e.g. with mounting plate
- Unshielded (EMC shielding retrofittable)
- Symmetrical design, identical front and rear side
- For board depth 160 mm, 220 mm, 280 mm, and 340 mm (depending on case depth)
- Online download of 3D CAD data
- Four versions:
  - Bezels
  - Front handles
  - 19" mounting brackets
  - With 19" mounting brackets and front handles

DELIVERY COMPRISES (in kit form)

Item	Qty	Description
1	2	Side panel, Al, 2 mm, chromated
2	2	Side plate, Al, 1 mm, visible surfaces powder-coated, RAL 9006
3	2	Rear trim, Al die-cast, powder-coated, RAL 7016
3a	2	Bezel, Al die-cast, powder-coated, RAL 7016
3b	2	Front handle, Al die-cast, powder-coated, RAL 7016
3c	2	19" mounting angle, Al die-cast, powder-coated, RAL 7016
3d	2	19" mounting bracket with front handle, Al diecast, powder-coated, RAL 7016
4	4	Horizontal rail, type H-LD, Al, visible surfaces powder-coated, RAL 7016
11	2	1 Top cover and base plate, Al, 1 mm, internal surfaces conductive,visible surfaces powder-coated, RAL 9006, with GND/ earthing connection, top cover and base plate withventilation comb
12	4	Case foot with anti-slip protection, UL 94 V-0, PC black
13	2	Air filters
14	1	Fixing materials kit

3a, 3b, 3c or 3d according to selection

NOTE

- Order information see following page
- Horizontal rail at front bottom (3/4U + 4/5U) and bottom and top (6/7U) with perforation.
  Prepared for IEEE applications (insertion- / extraction handles).

ORDER INFORMATION

Accessories	Part no.
Earthing kit CU wire, 1.5 mm^2, PVC sleeve, green/yellow, 1 kit	**24571-380**



Plastic tip-up foot silver, similar to RAL 9006, PU 4 pieces	**20603-001**
Plastic tip-up foot anthracite, similar to RAL 7016, 4 pieces	**20603-002**
Stacking aid silver, similar to RAL 9006, PA, UL 94 V-0, PU 4 pieces	**20603-004**
Stacking aid anthracite, similar to RAL 7016, PA, UL 94 V-0, PU 4 pieces	**20603-003**

Desk-top cases – RatiopacProAir



107888278

	Width W	Depth D	Case height H		
			4 U	5 U	7 U
			PCB height h		
			3 U	4 U (3+1 U)	6
			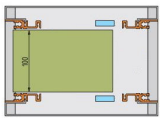	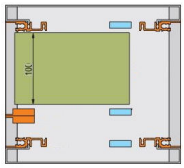	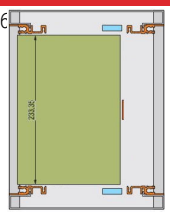
	HP	mm	Part no.	Part no.	Part no.
Bezels	28	255.5	24571-146	24571-194	24571-242
	28	315.5	24571-149	24571-197	24571-245
	42	255.5	24571-158	24571-206	24571-254
	42	315.5	24571-161	**24571-209**	24571-257
	42	375.5	24571-162	24571-210	24571-258
	63	255.5	24571-170	24571-218	24571-266
	63	315.5	24571-173	24571-221	24571-269
	63	375.5	24571-174	24571-222	24571-270
	63	435.5	24571-175	24571-223	24571-271
	84	255.5	24571-182	24571-230	24571-278
	84	315.5	24571-185	24571-233	24571-281
	84	375.5	24571-186	24571-234	24571-282
	84	435.5	24571-187	24571-235	24571-283
	84	495.5	24571-188	24571-236	24571-284
Front handles	28	255.5	24571-846	24571-894	24571-942
	28	315.5	24571-849	24571-897	24571-945
	42	255.5	24571-858	24571-906	24571-954
	42	315.5	24571-861	24571-909	24571-957
	42	375.5	24571-862	24571-910	24571-958
	42	435.5	24571-863	24571-911	24571-959
	63	315.5	24571-873	24571-921	24571-969
	63	375.5	24571-874	24571-922	24571-970
	63	435.5	24571-875	24571-923	24571-971
	84	255.5	24571-882	24571-930	24571-978
	84	315.5	24571-885	24571-933	24571-981
	84	375.5	24571-886	24571-934	24571-982
	84	435.5	24571-887	24571-935	24571-983
	84	495.5	24571-888	24571-936	24571-984
19" mounting brackets	84	255.5	**24571-582**	24571-630	24571-678
	84	315.5	**24571-585**	24571-633	24571-681
	84	375.5	24571-586	24571-634	**24571-682**
	84	435.5	24571-587	24571-635	24571-683
	84	495.5	24571-588	**24571-636**	24571-684
With 19" mounting brackets and front handles	84	255.5	**24572-670**	–	24572-690
	84	315.5	**24572-673**	–	**24572-693**
	84	375.5	**24572-674**	–	**24572-694**
	84	435.5	**24572-675**	–	**24572-695**
	84	495.5	**24572-676**	–	24572-696

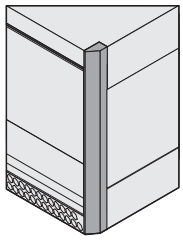

01805055

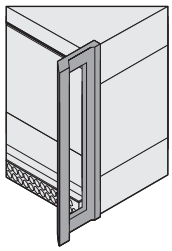

01805056

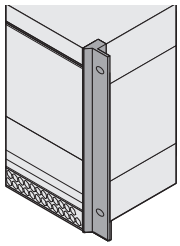

01805057

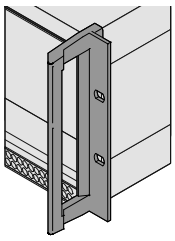

01805057

NOTE

- Dimension drawings and mounting depths see page 5.16
- Components see page 5.18

Part number in bold face type: ready for despatch within 2 working days
Part number in normal type: ready for despatch within 10 working days

Desk-top cases – RatiopacProAir

RATIOPACPRO AIR DIMENSION DRAWINGS

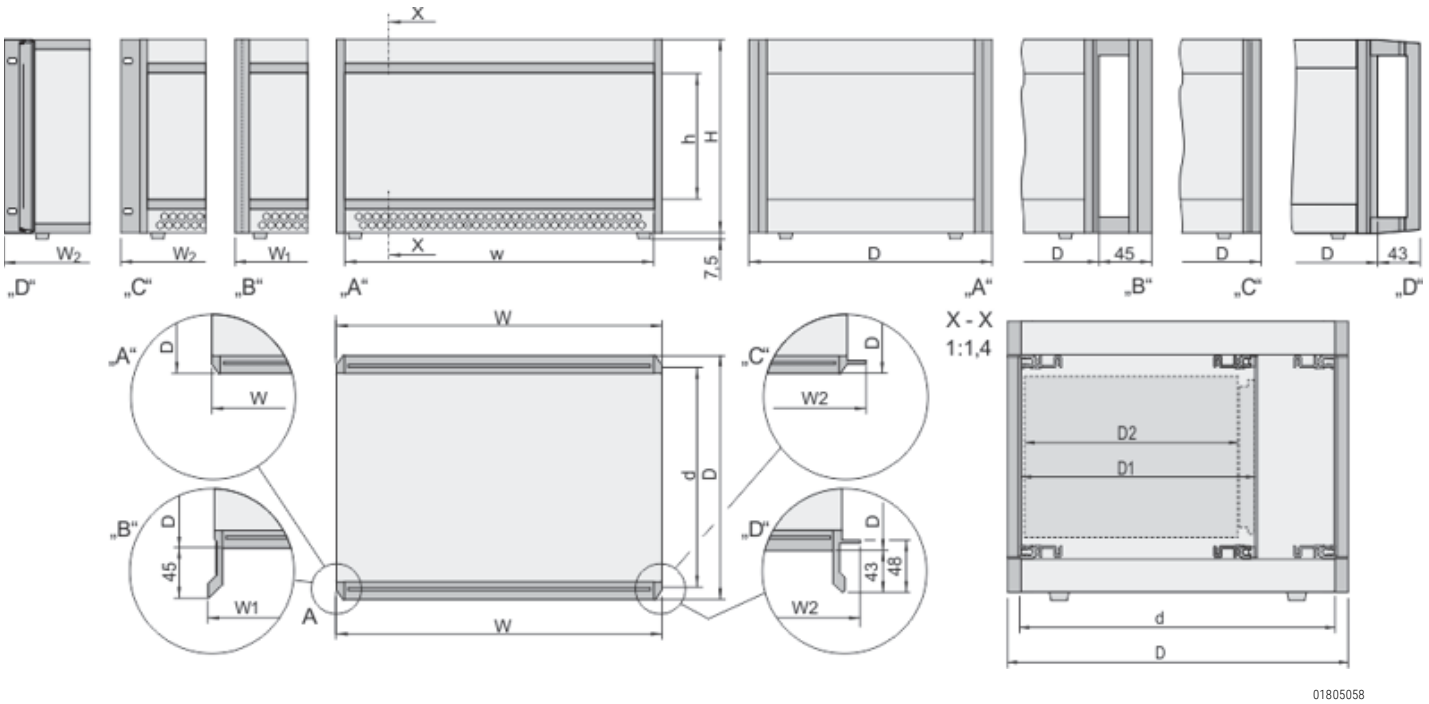

01805058

RatiopacPRO air with A - bezel; B - front handle; C - 19" mounting bracket; D - 19" mounting bracket with front handle

Dimensions table RatiopacPRO air

Height			Width				
H		H	W	W1	W2	w	
in U		in mm	in HP	in mm	in mm	in mm	in mm
4	177.00	112.35	28	164.42	177.62	198.12	142.82
			42	235.54	248.74	269.24	213.94
			63	342.42	355.42	375.92	320.62
			84	448.90	462.10	482.60	427.30
5	221.45	156.80	42	235.54	248.74	269.24	213.94
			63	342.42	355.42	375.92	320.62
			84	448.90	462.10	482.60	427.30
7	310.35	245.70	42	235.54	248.74	269.24	213.94
			63	342.42	355.42	375.92	320.62
			84	448.90	462.10	482.60	427.30

Depth			
D	d	D1	d2
Total depth in mm	Usable depth in mm	Plug-in depth in mm	Board depth in mm
255.5	235.5	175	160
		235	220
315.5	295.5	175	160
		235	220
		295	280
375.5	355.5	175	160
		235	220
		295	280
		355	340
435.5	415.5	175	160
		235	220
		295	280
		355	340
495.5	475.5	175	160
		235	220
		295	280
		355	340

Components mountable in 15 mm depth grid

Desk-top cases – RatiopacProAir

RADIAL FAN UNIT FOR RATIOPACPRO AIR

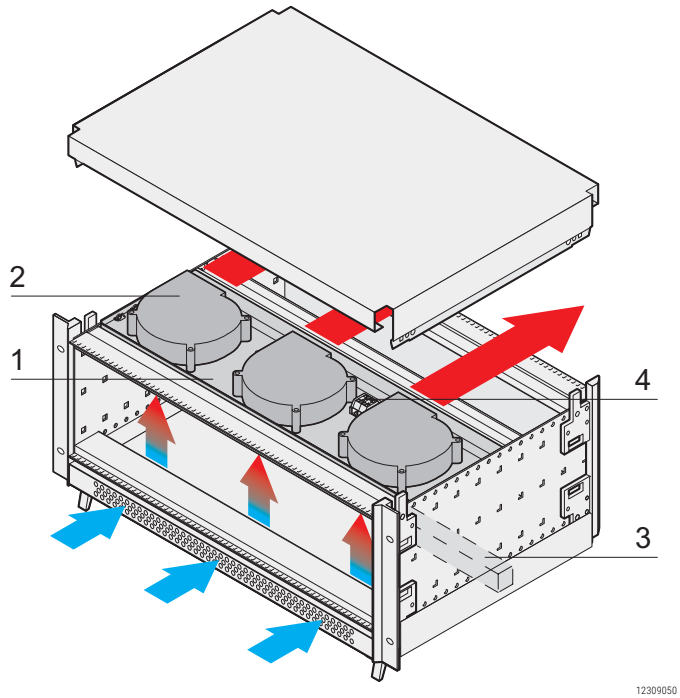

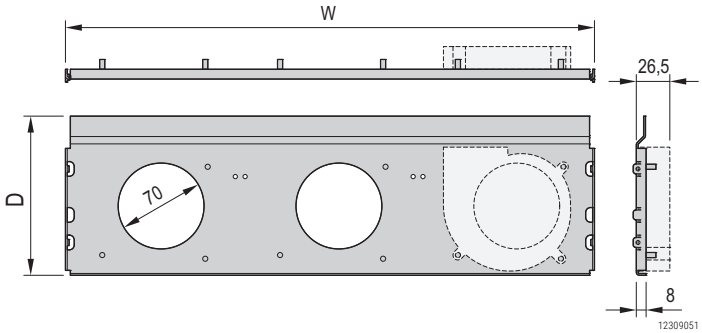

Depth D: 129.8 / 189.9 mm for 160 mm / 220 mm euroboards

- Only 1/2 U height
- Ball-bearing radial fans
- Fan holder in 4 widths and 2 depths
- Air capacity 36 m³/h (free blowing) per fan
- Air exhaust via perforation in cover plate
- No mechanical modification to case necessary
- Simple mounting
- No restriction to rear mounting space

DELIVERY COMPRISES (Kit)

Item	Qty	Description
1	1	Fan support, Al, 1.5 mm, with crimp sockets for mounting the fans
2	1-3	Radial fan, ball bearing, 12 V_{DC}; airflow volume (50 Hz) 36 m³/h, free blowing; power consumption 6.7 W; connecting cable 300 mm, without plug (AWG 26); noise level in dB (A): 47.0; max. static pressure in Pa: 190; max. ambient temperature: 60 °C; fan housing and rotor: UL 94 V-0
3	1	Compartment seal, PE foam, UL 94, self-adhesive, temperature range -20 °C ... +85 °C
4	1	Terminal clamp, UL 94 V-0
5	1	Assembly kit

ORDER INFORMATION

Width HP	Width mm	Number of fans	Part no.for PCB depth 160 mm	220 mm
28	146.87	1	24572-404	24572-408
42	218.00	1	24572-405	24572-409
63	324.67	2	24572-406	24572-410
84	431.35	3	**24572-407**	**24572-411**

NOTE

- Further configurations available on request
- Fans with tacho signal available on request

Part number in bold face type: ready for despatch within 2 working days
Part number in normal type: ready for despatch within 10 working days

EMC SEALING FRONT/REAR PANEL TO SIDE PANEL

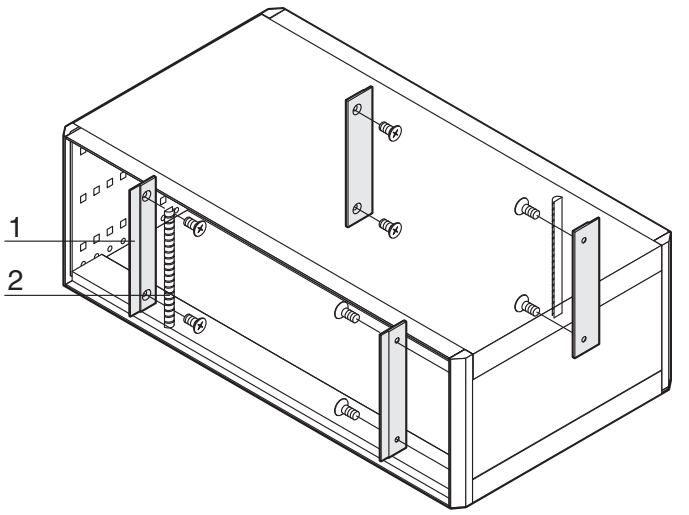

- For vertical EMC shielding between sub-assemblies and side panel
- Scope of delivery sufficient for one case

DELIVERY COMPRISES (kit)

Item	Qty	Description
1	4	EMC support profile, Al extrusion
2	2	EMC sealing (textile), core: foam, sleeve: textile cladding with CuNi coating
3	1	Assembly kit

ORDER INFORMATION

For case height U	Part no.
2	**24571-334**
3, 3/4-air	**24571-331**
4, 4/5-air	**24571-332**
6, 6/7-air	**24571-333**
5	**24571-335**

EMC SEALING SIDE PANEL TO COVER PLATE

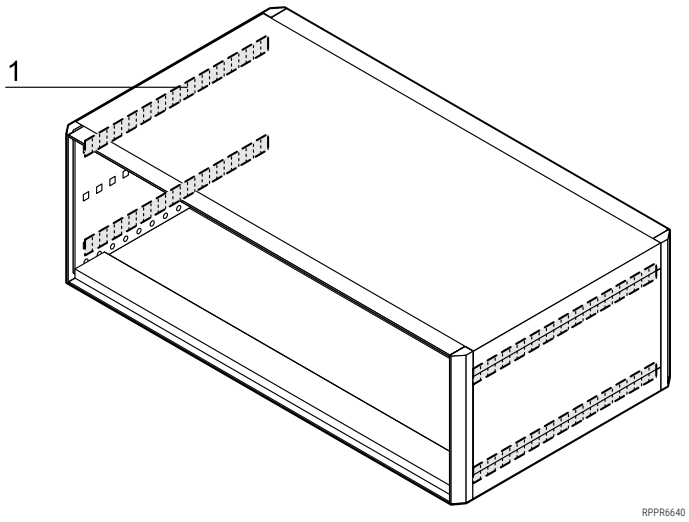

- For horizontal EMC shielding between side panels and cover plates
- Scope of delivery sufficient for one case

DELIVERY COMPRISES (kit)

Item	Qty	Description
1	4	Contact strip, stainless steel

ORDER INFORMATION

Depth mm	Part no.
255	**24571-338**
315	**24571-339**
375	**24571-340**
435	**24571-341**
495	**24571-342**

EMC SEALING FRONT/REAR PANEL TO HORIZONTAL RAIL

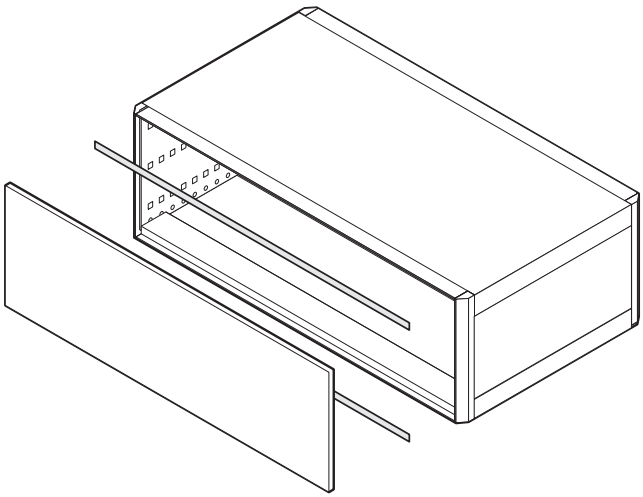

- The contact strip is clipped onto the horizontal rail and sets up the contact to front panel or rear panel
- Can be used for rear horizontal rails (H-VT, L-VT) and all front horizontal rails

DELIVERY COMPRISES

Item	Qty	Description
1	10/100	Stainless steel EMC gasket

ORDER INFORMATION

Width HP	Width mm	Qty/PU	Part no.
28	131.78	10	**24560-229**
42	202.9	10	**24560-231**
63	304.8	10	**24560-233**
84	416.3	10	**24560-235**
84	416.3	100	**24560-236**

EMC SEALING HORIZONTAL RAIL TO HORIZONTAL RAIL

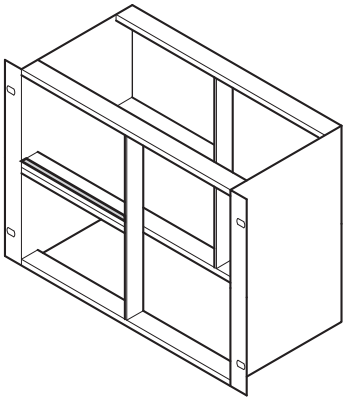

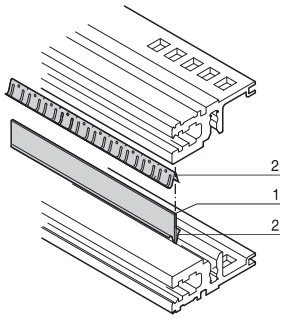

- For shielding of two horizontal rails located directly above each other with vertical division of the mounting height

DELIVERY COMPRISES

Item	Qty	Description
1	1	Cover strip, Al, 1 mm
2	2	Contact spring, St, stainless

ORDER INFORMATION

Length HP	Part no.
20	**24562-520**
28	**24562-528**
40	**24562-540**
42	**24562-542**
63	**24562-563**
84	**24562-584**
Assembly tool for EMC sealing, St, stainless (horizontal rails),1 piece	**24560-271**



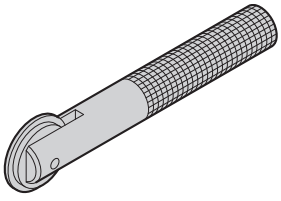

Assembly tool

Part number in bold face type: ready for despatch within 2 working days
Part number in normal type: ready for despatch within 10 working days

Desk-top cases – RatiopacPro/ -air

REAR PANELS WITH VENTILATION SLOTS

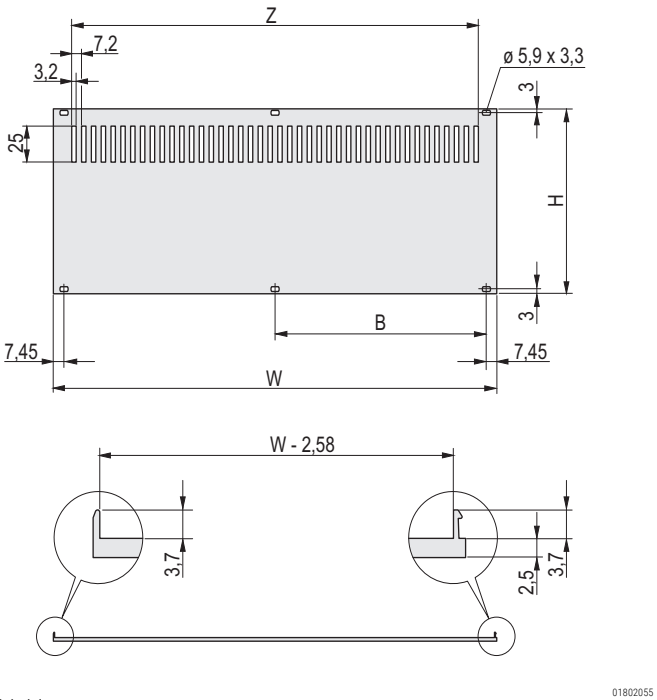

01802055

Shieldable

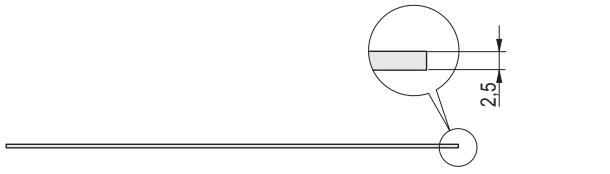

01804050

Unshielded

- Two versions:
  unshielded, Al, 2.5 mm;
  shieldable, Al extrusion (textile EMC seal, retrofittable)
- Mounting on horizontal rails (top and bottom)

DELIVERY COMPRISES

Item	Qty	Description
1	1	Rear panel, Al, 2.5 mm, front: anodised, rear: iridescent green chromated; unshielded or shieldable with EMC seal (textile)

ORDER INFORMATION

Height U	H mm	Width W HP	W mm	B mm	unshielded Part no.	shieldable Part no.
2	84	28	141.9	–	**30849-007**	20848-679
2	84	42	213	101.6	**30849-014**	20848-680
2	84	63	319.7	157.5	**30849-015**	20848-681
2	84	84	426.4	208.3	**30849-016**	20848-682
3, 3/4-air	128.4	28	141.9	–	**30849-008**	**20848-633**
3, 3/4-air	128.4	42	213	101.6	**30849-021**	20848-634
3, 3/4-air	128.4	63	319.7	157.5	**30849-022**	20848-635
3, 3/4-air	128.4	84	426.4	208.3	**30849-023**	**20848-636**
4, 4/5-air	172.9	28	141.9	–	**30849-009**	20848-656
4, 4/5-air	172.9	42	213	101.6	**30849-028**	20848-657
4, 4/5-air	172.9	63	319.7	157.5	**30849-029**	20848-658
4, 4/5-air	172.9	84	426.4	208.3	**30849-030**	20848-659
5	217.3	28	141.9	–	**30849-011**	20848-744
5	217.3	42	213	101.6	**30849-171**	20848-745
5	217.3	63	319.7	157.5	**30849-172**	20848-746
5	217.3	84	426.4	208.3	**30849-173**	20848-747
6, 6/7-air	261.8	28	141.9	–	**30849-010**	20848-640
6, 6/7-air	261.8	42	213	101.6	**30849-035**	**20848-641**
6, 6/7-air	261.8	63	319.7	157.5	**30849-036**	20848-642
6, 6/7-air	261.8	84	426.4	208.3	**30849-037**	**20848-643**

- Please order textile EMC seals separately
- Assembly parts see page Chapter 7, Front panels
- Rear/front panels without perforation see Chapter 7, Front panels
- Rear panels with fan available on request

TEXTILE EMC SEALS

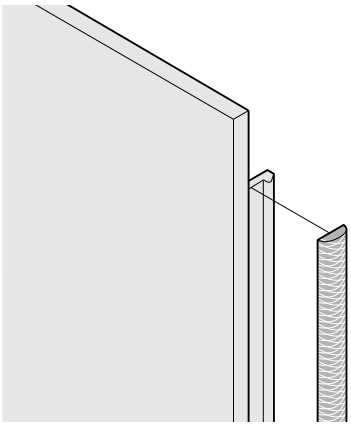

04602054

DELIVERY COMPRISES

Item	Qty	Description
1	10/100	Textile EMC seal, core: foam, sleeve: textile cladding with CuNi coating

ORDER INFORMATION

Height U	Height mm	Qty/PU pieces	Part no.
2	52	10	**21101-857**
3, 3/4-air	97	100	**21101-854**
3, 3/4-air	97	10	**21101-853**
4, 4/5-air	142	10	**21101-858**
5	187	10	**21101-978**
6, 6/7-air	232	100	**21101-856**
6, 6/7-air	232	10	**21101-855**

Desk-top cases – RatiopacPro/ -air

EMC FRONT/REAR PANEL, SLOTTED, SHIELDED

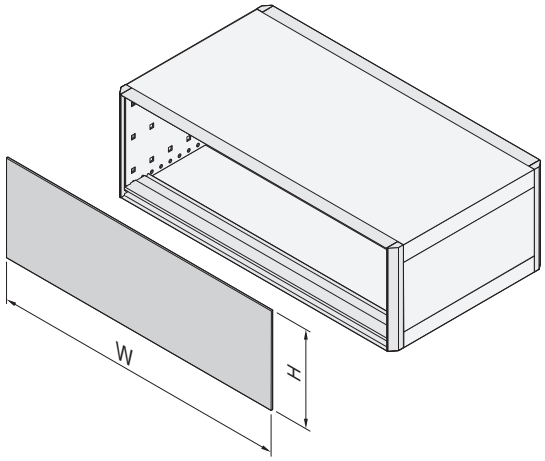

01811055

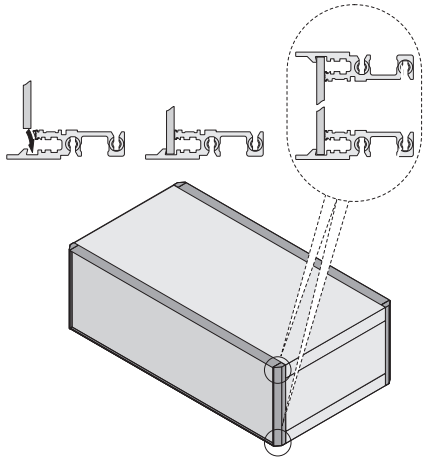

01811056

Front panel/horizontal rail

- No screws required for fixing
- Special horizontal rails cover the edges of the front panel (top and bottom) and prevent bowing of the front panel

DELIVERY COMPRISES (Kit)

Item	Qty	Description
1	1	Full-width front panel, Al, 2.5 mm, front: anodised, rear: colour passivated
2	2	Horizontal rail, front; special for this front panel
3	4	EMC support profile
4	2	Contact strip horizontal rail - front panel
5	3	EMC textile gasket
6	1	Fixing material kit, user manual

ORDER INFORMATION

For case height	Height H	For case width	Width W	Part no.
U	mm	HP	mm	
2	84.0	28	141.9	24572-599
2	84.0	42	213.2	24572-600
2	84.0	63	319.7	24572-601
2	84.0	84	426.4	24572-602
3, 3/4 air	128.4	28	141.9	**24572-603**
3, 3/4 air	128.4	42	213.2	**24572-604**
3, 3/4 air	128.4	63	319.7	**24572-605**
3, 3/4 air	128.4	84	426.4	**24572-606**
4, 4/5 air	172.9	28	141.9	24572-607
4, 4/5 air	172.9	42	213.2	24572-608
4, 4/5 air	172.9	63	319.7	24572-609
4, 4/5 air	172.9	84	426.4	24572-610

NOTE

- To obtain a shielded case, all EMC sealings must be fitted (front panel/rear panel - side panel; side panel - cover plate; front panel/ rear panel - horizontal rail; horizontal rail - horizontal rail)
- EMC sealing see from page 5.18

Part number in bold face type: ready for despatch within 2 working days
Part number in normal type: ready for despatch within 10 working days

Desk-top cases – RatiopacPro/ -air

FULL-WIDTH FRONT PANEL, SLOTTED, UNSHIELDED

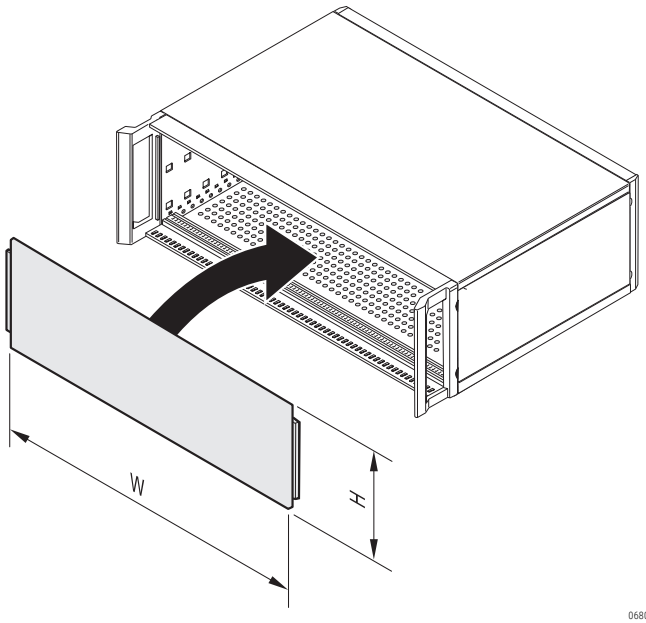

06801502



135395629

- Front panels can also be used as rear panels
- No screws required for fixing
- Inserted between side panel and castings such as trim, 19" mounting bracket or handle

DELIVERY COMPRISES

Item	Qty	Description
1	1	Front panel, Al, 2.5 mm, front: anodised, rear: colour passivated

ORDER INFORMATION

For case height U	Height H mm	For case width HP	Width W mm	Part no.
2	84	28	141.9	34571-617
2	84	42	213.2	34571-618
2	84	63	319.7	34571-619
2	84	84	426.4	**34571-620**
3, 3/4-air	128.4	28	141.9	**34571-605**
3, 3/4-air	128.4	42	213.2	**34571-606**
3, 3/4-air	128.4	63	319.7	**34571-607**
3, 3/4-air	128.4	84	426.4	**34571-608**
4, 4/5-air	172.9	28	141.9	34571-609
4, 4/5-air	172.9	42	213.2	34571-610
4, 4/5-air	172.9	63	319.7	34571-611
4, 4/5-air	172.9	84	426.4	**34571-612**
5	217.3	28	141.9	34571-621
5	217.3	42	213.2	34571-622
5	217.3	63	319.7	34571-623
5	217.3	84	426.4	34571-624
6, 6/7-air	261.8	28	141.9	34571-613
6, 6/7-air	261.8	42	213.2	34571-614
6, 6/7-air	261.8	63	319.7	34571-615
6, 6/7-air	261.8	84	426.4	**34571-616**

NOTE

- Screw-fixed front panels see chapter Front panels, page 7.4

EARTHING KIT

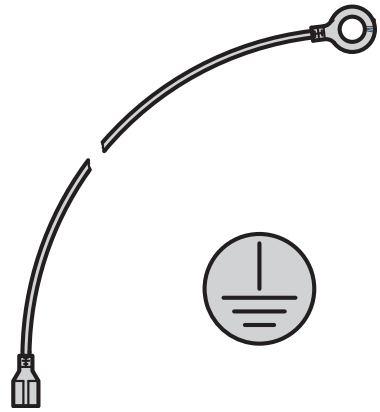

aza43284

- Forms the GND/earthing connections between side panels, base plate, top cover and rear panel
- Protective GND/earthing connections in accordance with:
  - DIN EN 50178/VDE 0160
  - DIN EN 62368-1/VDE 0805
  - DIN EN 61010-1/VDE 0411 part 1
  - DIN EN 61010-1A2/VDE 0411 part 1/A1
- VDE tested

ORDER INFORMATION

Description	Part no.
GND/earthing kit, Cu wire 1.5 mm^2, PVC sleeve, green/yellow	**24571-380**

Desk-top cases – RatiopacPro

FRONT PANEL, 1 U, UNSHIELDED, FOR 4 U CASE, FOR MOUNTING ON HORIZONTAL RAILS

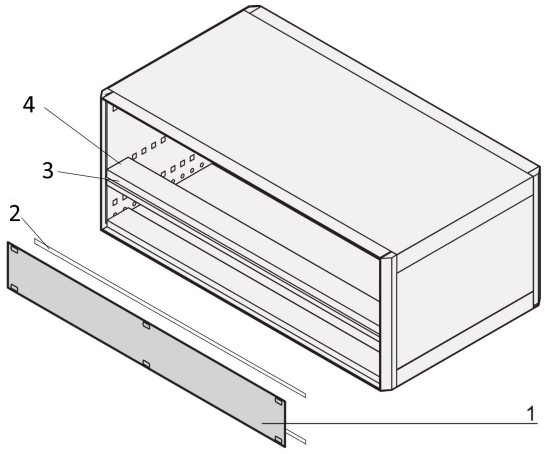

05806064

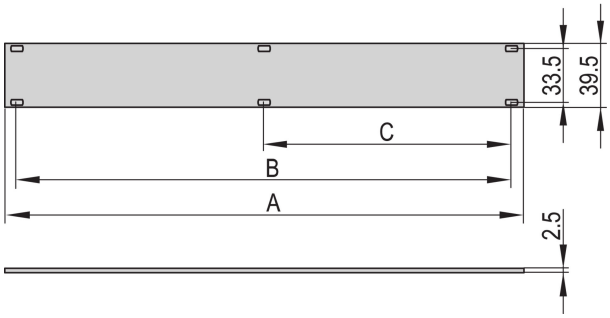

05806065

DELIVERY COMPRISES

Item	Qty	Description
1	1	Front panel, Al, 2.5 mm, front anodised, rear iridescent green chromated

ORDER INFORMATION

Width HP	A mm	B mm	C mm	Front panel Part no.
28	141.9	127.0	–	**20850-423**
42	213.0	198.1	101.6	**20850-424**
63	319.7	304.8	157.5	**20850-425**
84	426.4	411.5	203.2	**20850-426**
Accessories				
Pozidrive/slotted collar screw M2.5 x 12.3, St, nickel-plated, PU 100 pieces				**21101-101**
Plastic sleeve, PA, grey PU 100 pieces				**21100-464**

NOTE

- Please order items 2, 3 and 4 separately

Width HP	Item 2 EMC gasket, front panel/horizontal rail PU 10 pieces Part no.	Item 3 EMC gasketing kit horizontal rails, 1 piece Part no.	Item 4 Horizontal rail type H-KD, 1 piece (SPQ 10)1) Part no.
28	**24560-229**	**24562-528**	**34560-228**
42	**24560-231**	**24562-542**	**34560-242**
63	**24560-233**	**24562-563**	**34560-263**
84	**24560-235**	**24562-584**	**34560-284**

1) SPQ (standard pack quantity): Order number includes 1 piece, but delivery is exclusively made in standard pack quantity (SPQ); please order at least the SPQ quantity or a multiple thereof

TIP-UP FEET AND STACKING AID/DESIGN ELEMENT

- Can be used instead of standard feet
- Carrying capacity: 25 kg per foot
- Mounting holes in bottom of casing



Tip-up foot



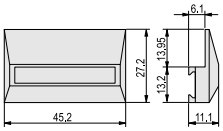

Stacking aid/design element

01802076

DELIVERY COMPRISES (kit)

Item	Qty	Description
1	4	Foot, PA, UL 94 V-0
2	4	Anti-slip protection, TPE
3	2	Tip-up device, PA, UL 94 V-0
4	1	Assembly kit

ORDER INFORMATION

Description	Part no.
Tip-up foot, silver, similar to RAL 9006	**20603-001**
Tip-up foot, anthracite, similar to RAL 7016	**20603-002**
Stacking aid/design element silver, similar to RAL 9006, PA, UL 94 V-0, PU 4 pieces	**20603-004**
Stacking aid/design element anthracite, similar to RAL 7016, PA, UL 94 V-0, PU 4 pieces	**20603-003**

NOTE

- Tip-up feet are required to mount the stacking aid

Part number in bold face type: ready for despatch within 2 working days
Part number in normal type: ready for despatch within 10 working days

AIR FILTERS FOR RATIOPACPRO

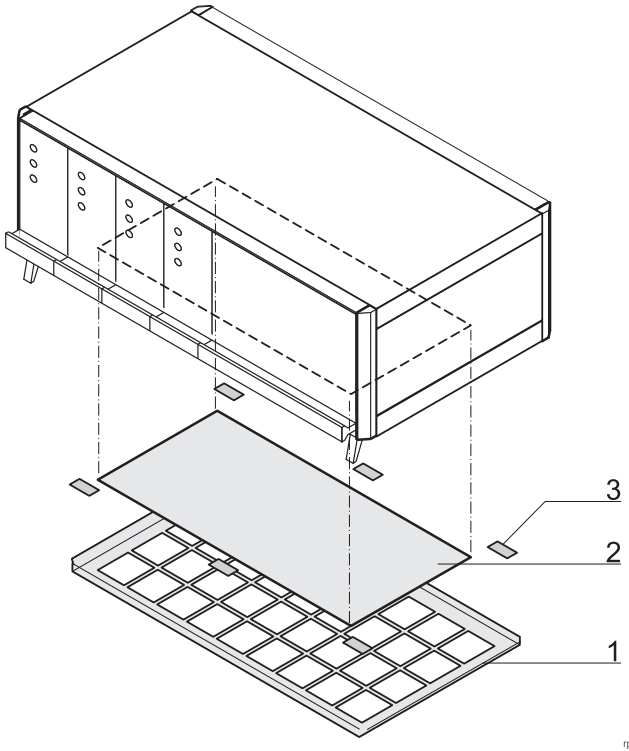

- Retrofit mounting without reworking and tools
- Filter replacement without opening the case, IP protection retained

DELIVERY COMPRISES (kit)

Item	Qty	Description
1	1	Filter holder, Al, 1 mm, powder-coated, RAL 9006
2	1	Filter mat, synthetic fibre
3	1	Self-adhesive fixings

ORDER INFORMATION

For case width HP	Air filter Part no.	Replacement filter 1 piece Part no.
28	**24571-325**	**64571-033**
42	**24571-326**	**64571-034**
63	**24571-327**	**64571-035**
84	**24571-328**	**64571-036**

- To optimise the air supply, tip-up feet must be fitted to the case, see page 5.23

AIR BAFFLES FOR RATIOPACPRO AIR

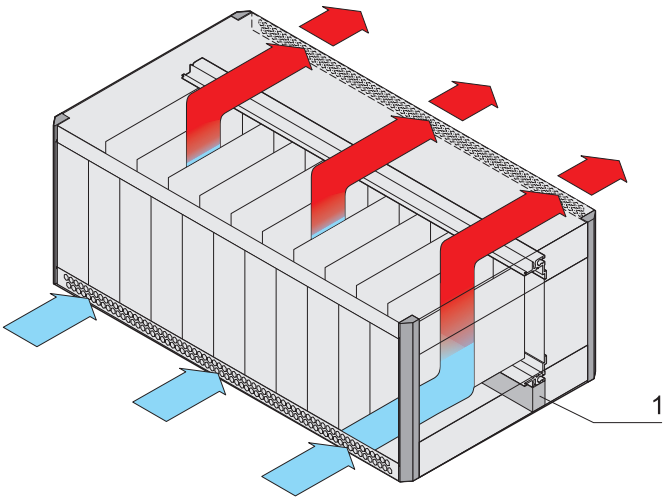

- The air baffle (item 1) closes the space (1/2 U) between the rear horizontal rail and base plate

DELIVERY COMPRISES (in kit form)

Item	Qty	Description
1	1	Compartment seal, PE foam, UL 94 HF 1 + HF 2, self-adhesive, temperature range: -40 °C ... +85 °C

ORDER INFORMATION

For case width HP	Length mm	Part no.
42	218.4	**20833-351**
63	325.1	**20833-352**
84	431.8	**20833-353**

NOTE

- Fan rear panel available on request
- Radial fan unit see page 5.17

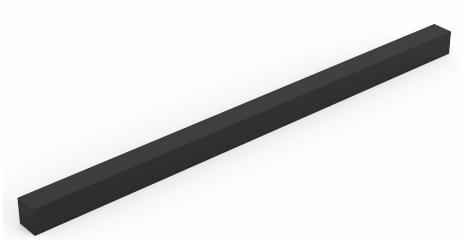

FRONT HANDLES FOR RETROFITTING

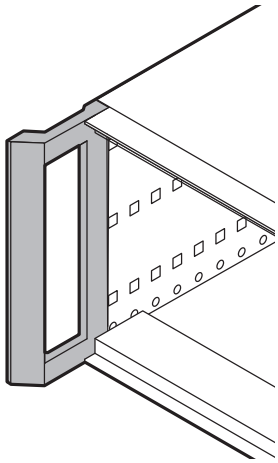

RPPR6651

- For conversion of cases with cover strip, 19" mounting bracket or 19" mounting bracket with front handle

DELIVERY COMPRISES

Item	Qty	Description
1	2	Front handle, Al die-cast, powder-coated, RAL 7016

ORDER INFORMATION

Front handle for	Part no.
RatiopacPRO 2 U	**24572-708**
RatiopacPRO 3 U	**24571-301**
RatiopacPRO 4 U	**24571-302**
RatiopacPRO 5 U	24571-993
RatiopacPRO 6 U	**24571-303**
RatiopacPRO air 3/4 U	**24571-304**
RatiopacPRO air 4/5 U	**24571-305**
RatiopacPRO air 6/7 U	**24571-306**

19" MOUNTING BRACKETS FOR RETROFITTING

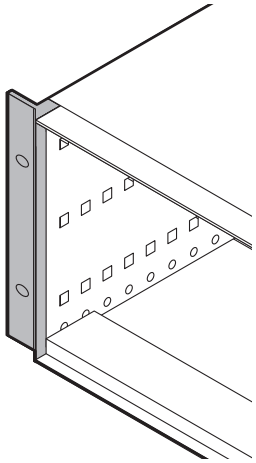

RPPR6652

- For conversion of cases with cover strip, front handle or 19" mounting bracket with front handle

DELIVERY COMPRISES

Qty	Description
2	19" mounting bracket, Al diecast, powder-coated, RAL 7016

ORDER INFORMATION

19" mounting angle	Part no.
RatiopacPRO 2 U	**24571-994**
RatiopacPRO 3 U	**24571-295**
RatiopacPRO 4 U	**24571-296**
RatiopacPRO 5 U	**24571-992**
RatiopacPRO 6 U	**24571-297**
RatiopacPRO air 3/4 U	**24571-298**
RatiopacPRO air 4/5 U	**24571-299**
RatiopacPRO air 6/7 U	**24571-300**

19" MOUNTING BRACKET WITH FRONT HANDLE FOR CONVERSION

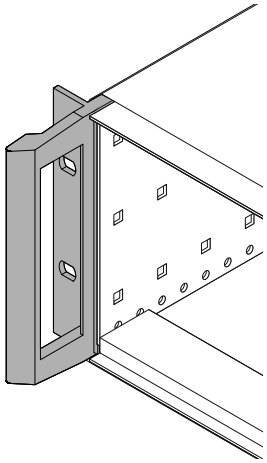

01813056

- For conversion of cases with cover strip, front handle or 19" mounting bracket

DELIVERY COMPRISES

Qty	Description
2	19" mounting bracket with front handle, Al diecast, powder-coated, RAL 7016

ORDER INFORMATION

19" mounting angle	Part no.
RatiopacPRO 2 U	**24572-700**
RatiopacPRO 3 U	**24572-701**
RatiopacPRO 4 U	**24572-702**
RatiopacPRO 6 U	**24572-704**
RatiopacPRO air 3/4 U	**24572-705**
RatiopacPRO air 6/7 U	**24572-707**

Part number in bold face type: ready for despatch within 2 working days
Part number in normal type: ready for despatch within 10 working days

CABLE HOLDER

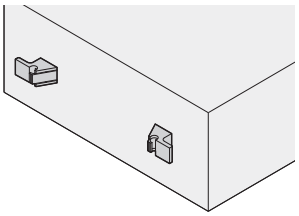

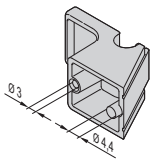

02908053

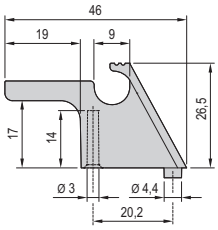

02908052

DELIVERY COMPRISES

Item	Qty	Description
1	2	Cable bracket, ABS, UL V-94 0, RAL 7016, detent for cables between 8 mm and 12 mm
2	1	Drilling template, two drilled holes each per bracket are needed in rear panel
3	1	Assembly kit

ORDER INFORMATION

Description	Part no.
Cable holder	**24575-800**

STRAP HANDLES

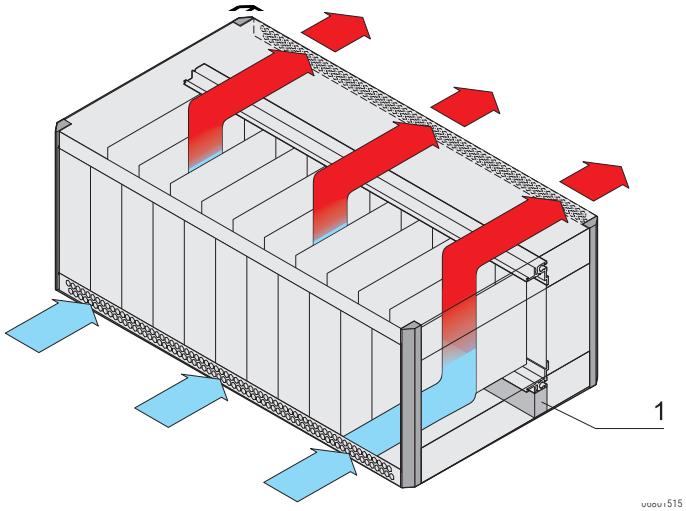

- Retrofittable without mechanical modifications to the case
- Static load-carrying capacity 20 kg

DELIVERY COMPRISES (kit)

Item	Qty	Description
1	1	Handle, steel spring, plastic-sheathed (flexible plastic), RAL 7016
2	1	Side plate, Al, visible surfaces powder-coated, RAL 9006
3	2	Adaptor, Al die-cast
4	1	Assembly kit

ORDER INFORMATION

For case depth mm	For case height 3 U, 4 U air Part no.	For case height4 HE, 5 Uair Part no.
315	**24571-308**	**24571-314**
375	**24571-309**	**24571-315**
435	**24571-310**	**24571-316**

Desk-top cases – RatiopacPro/ -air

TIP-UP CARRYING HANDLES



06803006

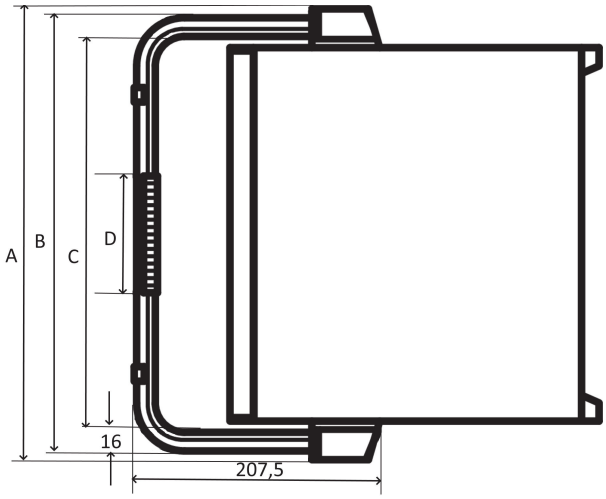

For case height	For case width	A	B	C	D
U	HP	mm	mm	mm	mm
3, 4, 3/4-air, 4/5-air	42	283,4	279,4	247,4	115
3, 4, 3/4-air, 4/5-air	63	390,1	386,1	354,1	195
3, 4, 3/4-air, 4/5-air	84	496,8	492,8	460,8	195

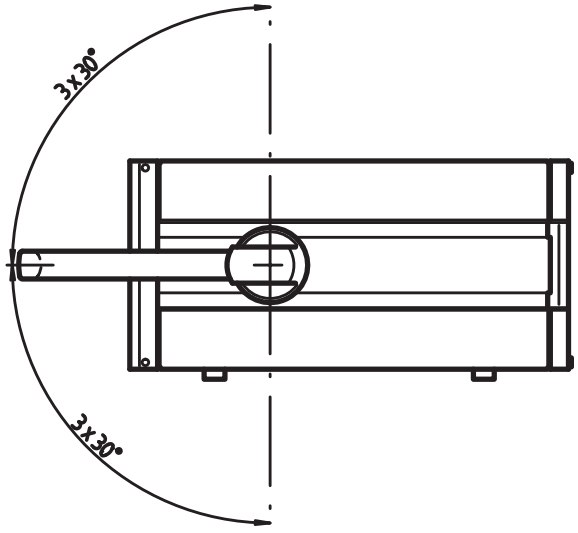

rpa43898

- Retrofittable without mechanical modifications to the case
- Adjustable in 30° increments
- Static load-carrying capacity 30 kg

DELIVERY COMPRISES (kit)

Item	Qty	Description
1	1	Carrying bar, Al extrusion, powder coated, RAL 9006
2	1	Handle shell, ABS, UL 94 V-0, RAL 7016
3	2	Tip-up protection, ABS, UL 94 V-0, RAL 7016
4	2	Notch device, Al die-cast
5	2	Cover cap, ABS, UL 94 V-0, RAL 7016

ORDER INFORMATION

For case height	For case width	For case depth	Tip-up carrying handle	Assembly kit
U	HP	mm	Part no.	Part no.
3, 3/4 air	42	255	**24571-320**	**24571-352**
3, 3/4 air	42	315	**24571-320**	**24571-353**
3, 3/4 air	42	375	**24571-320**	**24571-354**
3, 3/4 air	42	435	**24571-320**	**24571-355**
3, 3/4 air	42	495	**24571-320**	**24571-356**
3, 3/4 air	63	255	**24571-321**	**24571-352**
3, 3/4 air	63	315	**24571-321**	**24571-353**
3, 3/4 air	63	375	**24571-321**	**24571-354**
3, 3/4 air	63	435	**24571-321**	**24571-355**
3, 3/4 air	63	495	**24571-321**	**24571-356**
3, 3/4 air	84	255	**24571-322**	**24571-352**
3, 3/4 air	84	315	**24571-322**	**24571-353**
3, 3/4 air	84	375	**24571-322**	**24571-354**
3, 3/4 air	84	435	**24571-322**	**24571-355**
3, 3/4 air	84	495	**24571-322**	**24571-356**
4, 4/5 air	42	255	**24571-320**	**24571-359**
4, 4/5 air	42	315	**24571-320**	**24571-360**
4, 4/5 air	42	375	**24571-320**	**24571-361**
4, 4/5 air	42	435	**24571-320**	**24571-362**
4, 4/5 air	42	495	**24571-320**	24571-363
4, 4/5 air	63	255	**24571-321**	**24571-359**
4, 4/5 air	63	315	**24571-321**	**24571-360**
4, 4/5 air	63	375	**24571-321**	**24571-361**
4, 4/5 air	63	435	**24571-321**	**24571-362**
4, 4/5 air	63	495	**24571-321**	24571-363
4, 4/5 air	84	255	**24571-322**	**24571-359**
4, 4/5 air	84	315	**24571-322**	**24571-360**
4, 4/5 air	84	375	**24571-322**	**24571-361**
4, 4/5 air	84	435	**24571-322**	**24571-362**
4, 4/5 air	84	495	**24571-322**	24571-363

NOTE

- Cannot be used in conjunction with front handles
- Assembly kit is required for tip-up carrying handle, please order separately

Part number in bold face type: ready for despatch within 2 working days
Part number in normal type: ready for despatch within 10 working days

TORX PANHEAD SCREWS

ORDER INFORMATION

	Description	Application	Material	Dimension	Qty/PU	Part no.
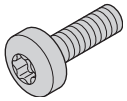 AZA45923	Countersunk screw with Torx	For horizontal rail to side panel, with GND/earthing function	St, zinc-plated	M4 x 14	100	**24571-371**
	Countersunk screw with Torx	For horizontal rail to side panel, if guide rail is bolted onto slot 1	St, zinc-plated	M4 x 10	100	**24571-372**

NUT

ORDER INFORMATION

	Description	Application	Material	Dimension	Qty/PU	Part no.
 AZA45921	Square nut	For fixing: parts to side panels, support profiles, mounting plates	St, zinc-plated	M4	100	**24560-140**

ASSEMBLY TOOLS

ORDER INFORMATION

	Description	Application	Dimension	Qty/PU	Part no.
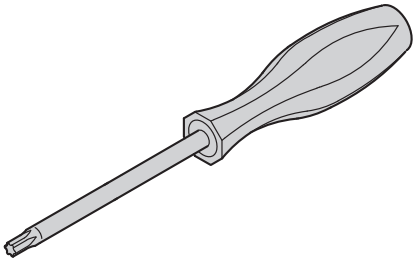 AZA45925	Torx screwdriver		T8	1	**64560-026**
			T20	1	**64560-027**
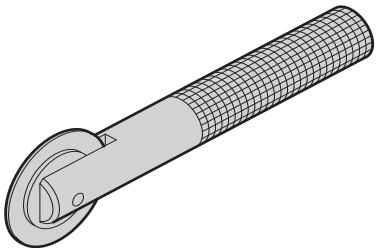 aza45938	Assembly tool for horizontal rails	Exclusively to fix stainless steel EMC gaskets in horizontal rails	–	1	**24560-271**
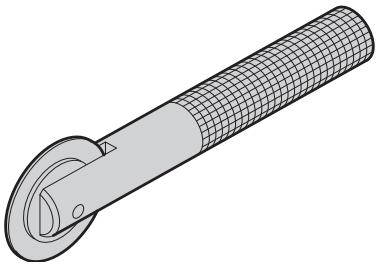 aza45937	Assembly tool for front panels	For mounting stainless steel EMC contact strips on front panels with lateral slot	–	1	**24560-270**

Desk-top cases – RatiopacPro/ -air

MOUNTING POSITION RATIOPACPRO HORIZONTAL RAILS/CENTRAL RAILS

front rear front rear

2 U

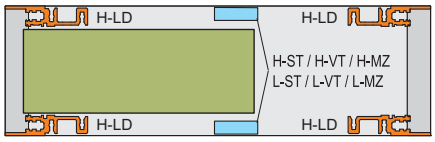

01805060

3 U

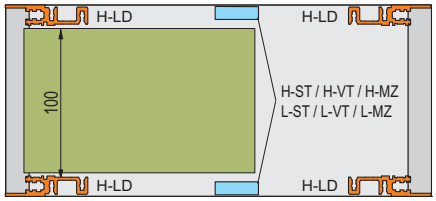

01802057

4 U (3 U + 1 U)

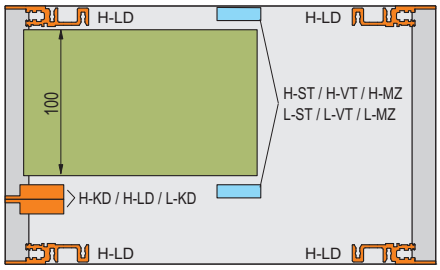

01802058

5 U (1 U + 3 U + 1 U)

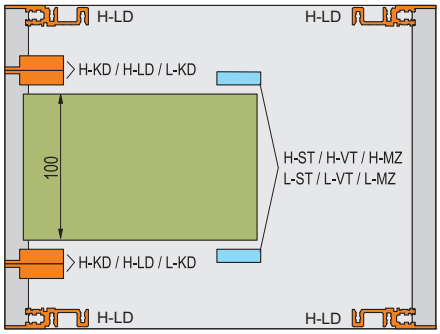

01805061

5 U (3 U + 2 U)

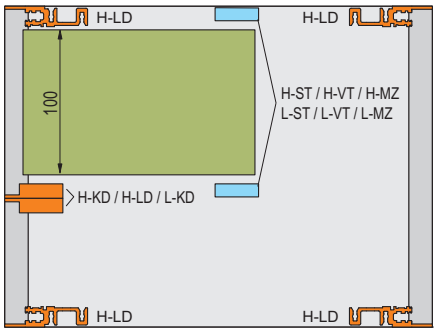

01805062

6 U

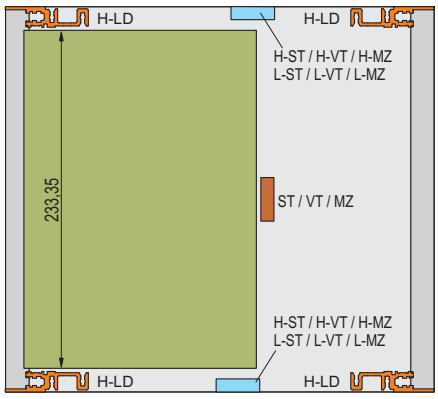

01802059

6 U (2 x 3 U)

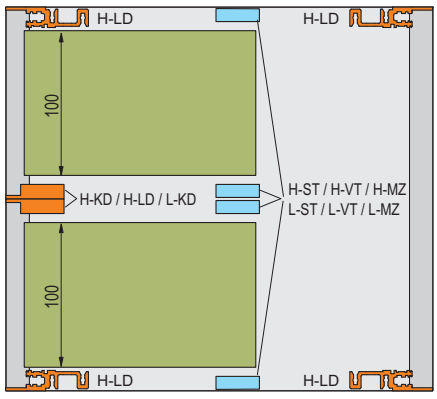

01802060

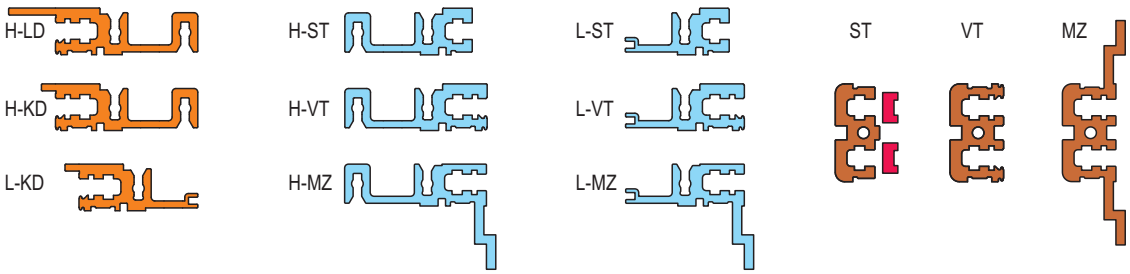

Horizontal rails can be bolted on in 15 mm depth grid

01808050

Part number in bold face type: ready for despatch within 2 working days
Part number in normal type: ready for despatch within 10 working days

Desk-top cases – RatiopacPro/ -air

MOUNTING POSITION RATIOPACPRO AIR HORIZONTAL RAILS/CENTRAL RAILS

front rear front rear

4-air U (1/2 U + 3 U + 1/2 U)

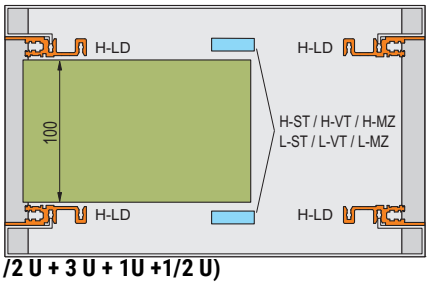

01802061

5-air U (1/2 U + 3 U + 1U +1/2 U)

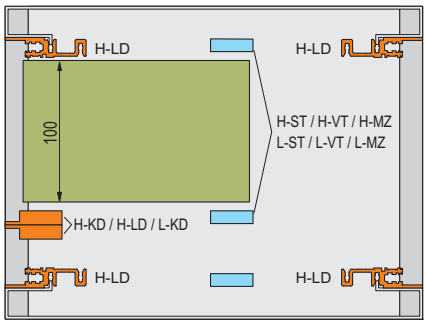

01802062

7-air U (1/2 U + 6 U + 1/2 U)

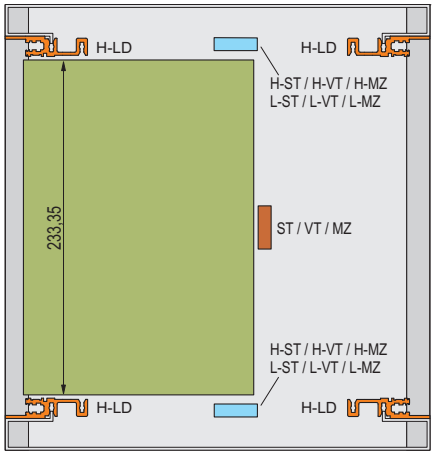

01802063

7-air U (1/2 U + 3 U + 3U 1/2 U)

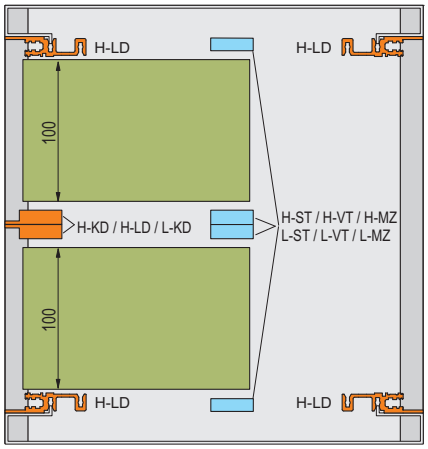

01802064

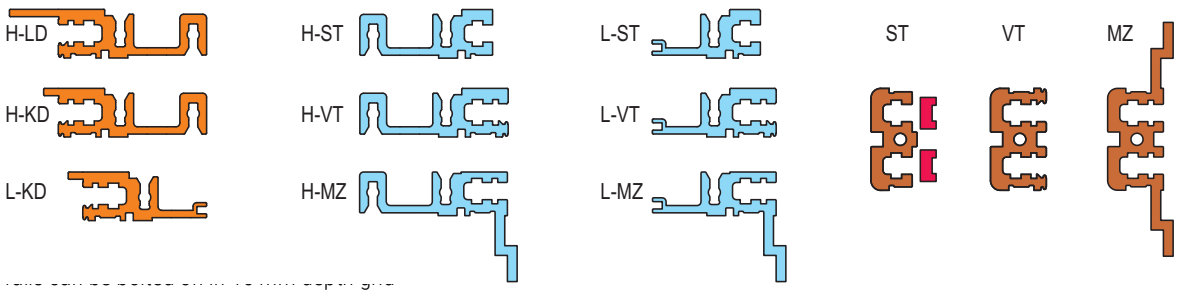

01808050

Horizontal

FRONT HORIZONTAL RAILS

ORDER INFORMATION

			With long lip for insertion/extraction of CompactPCI and VME64x boards
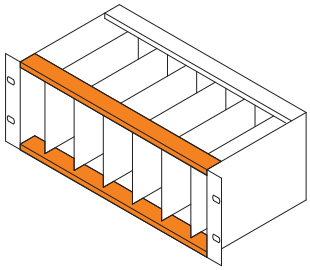 bza44980		"heavy" Type H-KD short lip  06197008 Al extrusion, anodised finish, contact surface conducting, with printed HP markings	"heavy" Type H-LD long lip  06197009 Al extrusion, anodised finish, contact surface conducting, with printed HP markings
Usable length HP	Length mm	1 piece (SPQ 10)[1]	1 piece (SPQ 10)[1]
28	147.32	**34560-228**	**34560-328**
42	218.44	**34560-242**	**34560-342**
63	325.12	**34560-263**	**34560-363**
84	431.80	**34560-284**	**34560-384**
M4 x 14, St, zinc-plated, PU 100pcs		**24571-371**	**24571-371**
M4 x 10, St, zinc-plated, necessary if guide rail is screwed to slot 1, PU 100 pieces		**24571-372**	**24571-372**
Threaded inserts see page		5.35	5.35

1) SPQ (standard pack quantity): Order number includes 1 piece, but delivery is exclusively made in standard pack quantity (SPQ); please order at least the SPQ quantity or a multiple thereof

Horizontal rail type "heavy": loading capacity > 7.5 kg

REAR HORIZONTAL RAILS

ORDER INFORMATION

	For indirect backplane fixing with insulation strip	For direct backplane fixing	For direct fixing of connectors to EN 60603-2 (DIN 41612)
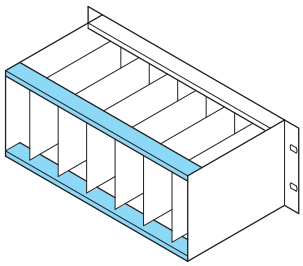 06105074	 04400001 "heavy" Type H-ST standard  06197011 Al extrusion, anodised finish, contact surface conducting, with printed HP markings	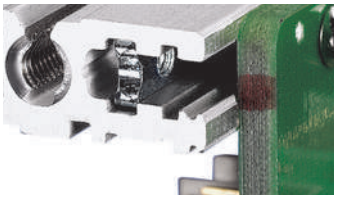 04400002 "heavy" Type H-VT long lip  06197013 Al extrusion, anodised finish, contact surface conducting, with printed HP markings	 04400003 "heavy" Type H-MZ with Z-rail  06197015 Al extrusion, anodised finish, contact surface conducting, with printed HP markings
Usable length HP / Length mm	1 piece (SPQ 10)[1]	1 piece (SPQ 10)[1]	1 piece (SPQ 10)[1]
28 / 147.32	**34560-528**	**34560-728**	**34560-928**
42 / 218.44	**34560-542**	**34560-742**	**34560-942**
63 / 325.12	**34560-563**	**34560-763**	**34560-963**
84 / 431.80Torx	**34560-584**	**34560-784**	**34560-984**
Torx panhead screw, 4 x 14, 100pcs	**24571-371**	**24571-371**	**24571-371**
Torx panhead screw, 4 x 10, 100pcs	**24571-372**	**24571-372**	**24571-372**
Perforated rail for connector mounting with insulation strip see page	5.35	–	–
Z-rail for connector mounting without insulation strip see page	5.35	–	–
Insulation strips see page	5.35	–	–
Threaded inserts see page	5.35	5.35	5.35

1) SPQ (standard pack quantity): Order number includes 1 piece, but delivery is exclusively made in standard pack quantity (SPQ); please order at least the SPQ quantity or a multiple thereof

Horizontal rail type "heavy": loading capacity > 7.5 kg

Desk-top cases – RatiopacPro/ -air

HORIZONTAL RAILS REAR, CENTRE

ORDER INFORMATION

	For indirect mounting of backplanes via insulation strip	For direct backplane mounting	For direct fixing of connectors to EN 60603-2 (DIN 41612)
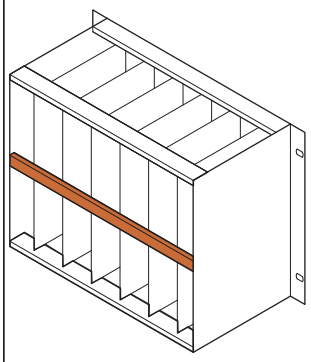 06108090	 04400001	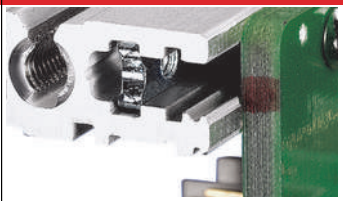 04400002	 04400003
	Type ST	Type VT	Type MZ
	 06197016	 06197017	 06197018
	Al extrusion, finish anodised, conductive contact surface; horizontal rail type AB (AB = support) is required to fix the 80 mm rear I/O boards; without marking	Al extrusion, finish anodised, conductive contact surface; horizontal rail type AB (AB = support) is required to fix the 80 mm rear I/O boards; without marking	Al extrusion, finish anodised, conductive contact surface; horizontal rail type AB (AB = support) is required to fix the 80 mm rear I/O boards; without marking
Usable length HP / Length mm	1 piece (SPQ 10)[1]	1 piece (SPQ 10)[1]	1 piece (SPQ 10)[1]
28 / 147.32	**34561-028**	**34561-128**	**34561-228**
42 / 218.44	**34561-042**	**34561-142**	**34561-242**
63 / 325.12	**34561-063**	**34561-163**	**34561-263**
84 / 431.80	**34561-084**	**34561-184**	**34561-284**
Torx panhead screw, 4 x 14, 100 pcs	**24571-371**	**24571-371**	**24571-371**
Torx panhead screw, 4 x 10, 100 pcs	**24571-372**	**24571-372**	**24571-372**
Insulation strips see page	5.35	–	–
Threaded inserts see page	5.35	5.35	5.35

1) SPQ (standard pack quantity): Order number includes 1 piece, but delivery is exclusively made in standard pack quantity (SPQ); please order at least the SPQ quantity or a multiple thereof

Part number in bold face type: ready for despatch within 2 working days
Part number in normal type: ready for despatch within 10 working days

HORIZONTAL RAILS (TYPE AB) FOR REAR I/O GUIDE RAILS

ORDER INFORMATION

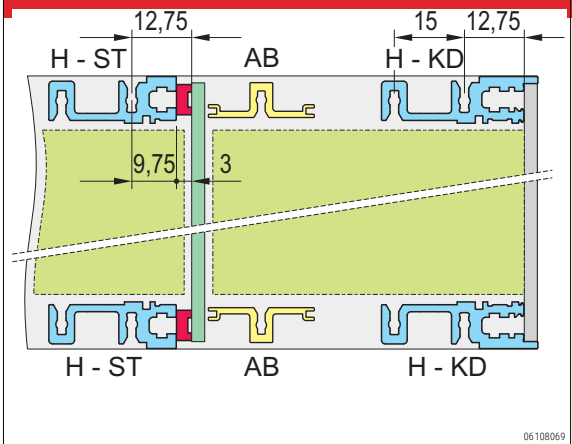

For CompactPCI in rear I/O area



06108009

Type AB



06197019

Al extrusion, finish anodised, conductive contact surface; horizontal rail type AB (AB = support) is required to fix the 80 mm rear I/O boards; without marking

Usable length HP	Length mm	1 piece (SPQ 10)[1)]
20	106.68	**34561-520**
28	147.32	**34561-528**
40	208.28	**34561-540**
42	218.44	**34561-542**
63	325.12	**34561-563**
84	431.80	**34561-584**
–	1000	**34561-501**
Screw, M4 x 14, PU 100 pieces, for fastening horizontal rail to side panel		**24571-371**

1) SPQ (standard pack quantity): Order number includes 1 piece, but delivery is exclusively made in standard pack quantity (SPQ); please order at least the SPQ quantity or a multiple thereof
"

NOTE

- All horizontal rails without print
- 1000 mm version without M4 thread in end

Desk-top cases – RatiopacPro/ -air

THREADED INSERTS, PERFORATED STRIPS, INSULATION STRIPS

	Threaded insert M2.5 / M3			Perforated strip (item 1)		Insulation strip	
	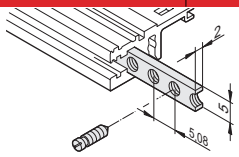 06103056			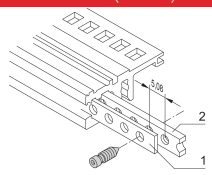 127685783		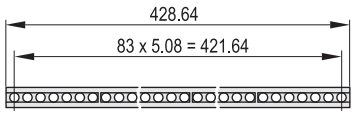 BZ6749	
	Required for fixing the front panel to the horizontal rail; St, zinc-plated; use collar screw 12.3 mm, see page 6.66			For centring shielded plug-in units, Al, 1 mm, please order fixing grub screw (torque 0,37Nm) separately		For insulated mounting of backplane; PC, UL 94 V-0, grey	
Usable length HP	Length mm	1 piece (SPQ 10)[1]	1 piece (SPQ 10)[1]	Length	[illegible]	Length mm	PU 10 pieces[2]
28	146.82	**34561-328**	–	147.12	**30845-197**	144.20	**24560-828**
42	217.94	**34561-342**	–	218.24	**30845-211**	210.40	**24560-842**
63	324.62	**34561-363**	–	324.92	**30845-232**	316.88	**24560-863**
84	431.30	**34561-384**	**34561-484**	431.60	**30845-253**	428.64	**24560-884**
Accessories							
Grub screw M2.5 x 8, PU 100 pieces		**21100-276**	–		–		–
Grub screw M2.5 x 9, PU 100 pieces		–	–		**21102-980**		–
Grub screw M3 x 8, PU 100 pieces		–	**21100-646**		–		–

1) SPQ (standard pack quantity): Order number includes 1 piece, but delivery is exclusively made in standard pack quantity (SPQ); please order at least the SPQ quantity or a multiple thereof

2) Part no. includes one packing unit (PU); delivery is exclusively made in PU

Z-RAILS, PERFORATED RAILS

		Z-rail for connectors DIN EN 60603-2, DIN 41612 item 1	31-pin, DIN 41617	Perforated rail EN 606032, DIN 41612 item 1
		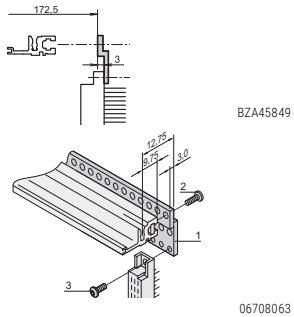 BZA45849 06708063	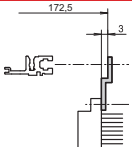 BZA45850	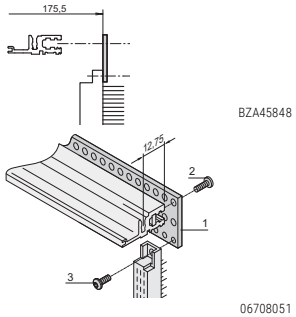 BZA45848 06708051
		For connector mounting with ST horizontal rails, please order threaded insert and screw separately	For connector mounting with ST horizontal rails, please order threaded insert and screw separately	For connector mounting with VT horizontal rails, please order threaded insert and screw separately
Usable length HP	Length mm	1 piece	1 piece	PU 4 pieces
28	142.24	**30822-033**	–	**20822-049**
42	213.36	**30822-047**	–	**20822-050**
60	304.80	**30822-065**	**30819-783**	**20822-047**
84	426.70	**30822-089**	**30819-808**	**20822-048**
Torx panhead screw, to fix connector to perforated rail, M2.5 x 7, PU 100 piecesItem 2		**24560-147**	**24560-147**	**24560-147**
Torx panhead screw, to fix perforated rail to horizontal rail, M2.5 x 10, PU 100 pieces Item 3		–	–	**24560-148**

Z-Rail and Perforated Rail in 4 an 8HP on request

Part number in bold face type: ready for despatch within 2 working days
Part number in normal type: ready for despatch within 10 working days

DIVIDER PLATES

ORDER INFORMATION

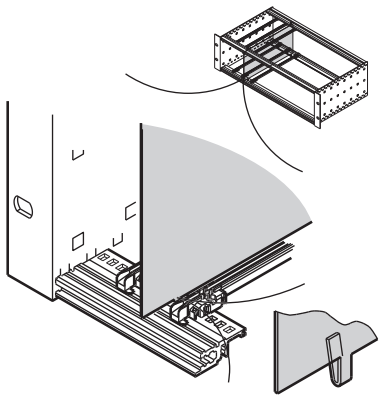

bpa45912

					Divider plates	
					Mounting position for stainless steel EMC gasket	Mounting position for textile EMC gasket
					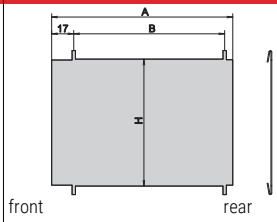 bpa45911	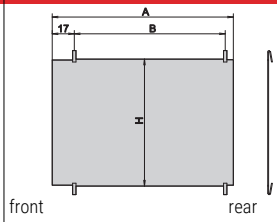 06105078
					Stainless steel, 1 mm, is mounted by clipping onto horizontal rail, space requirement on component side 2 mm; mounting direction varies with shielding design (EMC stainless steel or textile gasket); retrofitting the divider plate in an already-assembled subrack/ case will first require dismantling of the horizontal rails; where front panels are unshielded, both mounting directions are possible	
Height	Depth	A	B	H		
U	mm	mm	mm	mm	1 piece	
3	160	158.3	135.0	113.5	**34562-761**	
3	220	218.3	195.0	113.5	**34562-762**	
6	160	158.3	135.0	246.9	**34562-763**	
6	220	218.3	195.0	246.9	**34562-764**	

Desk-top cases – RatiopacPro/ -air

MOUNTING PLATES

ORDER INFORMATION

			Mounting plate	Assembly strip for partial widths
 06812002			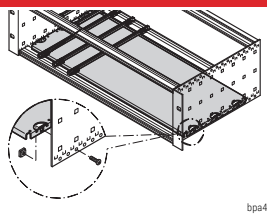 bpa45875 Al, 1.5 mm; for mounting over partial width, please order assembly strips separately	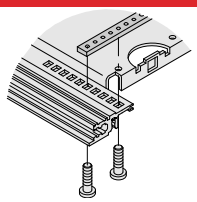 bpa46557 St, 2 mm, zinc-plated; is bolted from front to rear onto the horizontal rails; to fix mounting plates
Width		Board lengths		
HP	mm	mm	1 piece	1 piece
28	146.88	160	**34562-745**	**30840-021**
28	146.88	220	**34562-749**	**30840-033**
28	146.88	280	**34562-753**	**30840-045**
28	146.88	340	**34562-757**	**30840-057**
42	217.99	160	**34562-746**	**30840-021**
42	217.99	220	**34562-750**	**30840-033**
42	217.99	280	**34562-754**	**30840-045**
42	217.99	340	**34562-758**	**30840-057**
63	324.67	160	**34562-747**	**30840-021**
63	324.67	220	**34562-751**	**30840-033**
63	324.67	280	**34562-755**	**30840-045**
63	324.67	340	**34562-759**	**30840-057**
84	431.35	160	**34562-748**	–
84	431.35	220	**34562-752**	–
84	431.35	280	**34562-756**	–
84	431.35	340	**34562-760**	–
84	431.35	400	**34562-870**	–
84	431.35	460	**34562-871**	–
Assembly kit for mounting plate PU 1 kit (Torx countersunk screw M4 x 5, St, zinc-plated, 16 pieces; screw M4 x 6, St, zinc-plated, 14 pieces; M4 square nut, St, zinc-plated, 14 pieces)			**24560-184**	–
Assembly kit for assembly strips of mounting plate Torx screw M2.5 × 5, St, zinc-plated, PU 100 pieces			–	**24560-146**

NOTE

- Please order fixing material for assembly of mounting plate separately
- A guide rail can be mounted on the first and last slot position
- 4.4" and "reinforced" guide rails cannot be used

Part number in bold face type: ready for despatch within 2 working days
Part number in normal type: ready for despatch within 10 working days

HORIZONTAL BOARD INSTALLATION

ORDER INFORMATION

			Horizontal board installation		
			Board cage	Front frame for EMC shielding	Front frame, unshielded
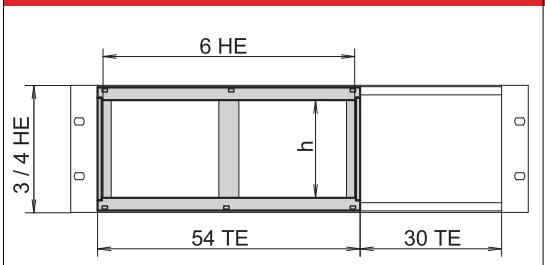 bpa45914			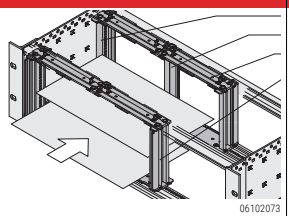 06102073	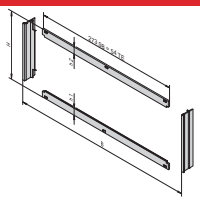 bpa45913	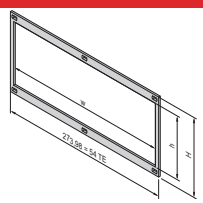 bza43061
			Struts die-cast zinc; horizontal rails front and rear; threaded insert, St, zinc-plated; fixing material kit; for horizontal mounting of double-height euroboards in 3 or 4 U high subracks/cases; 54 TE space required; **please order front frame for EMC shielding separately**	2 horizontal covers, Al, 2.5 mm, front anodised, rear iridescent green chromated; 2 vertical trims, Al extrusion, clear passivated; stainless steel EMC gasket; front frame forms the contact between subrack and the sub-assemblies	Al, 2.5 mm, clear anodised; front frame with cut-out, clear internal width w = 266.35 mm
Height U	Usable height h HP	Other dimensions and options Horizontal rail, front Horizontal rail, rear	PU 1 kit	PU 1 kit	1 piece
3	20		**24564-117**	**24564-109**	34564-108
3	20		**24564-118**	**24564-109**	34564-109
4	28		**24564-217**	**24564-209**	**34564-208**
Assembly tool, for mounting the EMC gasket (stainless steel)		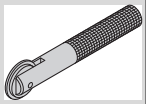	–	**24560-270**	–

* For direct backplane mounting

NOTE

- Please order front frame separately

Desk-top cases – RatiopacPro/ -air

COMBINED MOUNTINGS (6 U AND 2 X 3 U ONE ABOVE THE OTHER)

ORDER INFORMATION

	Combined mounting Horizontal and vertical subdivision (incl. front panel for stainless steel EMC gasket)	Alternative front panels for combined mounting Unshielded front panel, 6 U, 2 HP item 6	Alternative front panels for combined mounting Front panel for textile EMC gasket, 6 U, 2 HP item 6	Splitting extrusion For combined mounting Item 2
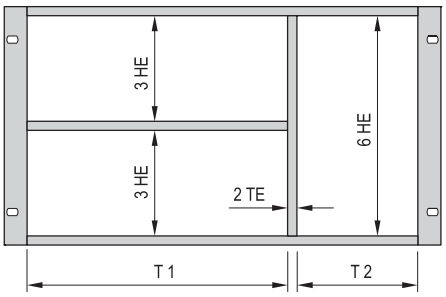 bza42182	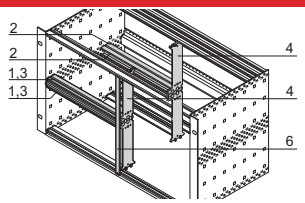 bpa46549	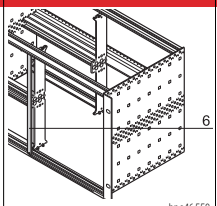 bpa46550	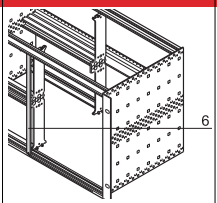 bpa46550	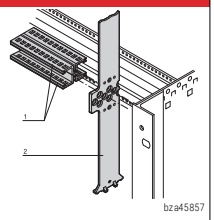 bza45857
	Item 1: 2 front horizontal rails (H-KD), Al extrusion, anodised; item 2: 2 rear horizontal rails (AB), Al extrusion, anodised; item 3: threaded insert, St, zinc-plated; item 4: Zn diecast support member; item 6: front panel 2 HP, 6 U, shielded; with EMC stainless steel gasket (84:0 without items 4, 6)	Al, 2.5 mm, front anodised, rear iridescent green chromated	Al, 2.5 mm, U-profile with notch, 6 U, 2 HP	6 U, die-cast zinc; splitting extrusion is inserted in the grid holes of the horizontal rail; the splitting extrusion can be bolted
Width pitch T1:T2 HP	PU 1 kit	1 (SPQ 5)	1 piece (SPQ 5)[1]	1 piece
20:62	**24562-420**			
40:42	**24562-440**			
42:40	**24562-442**	**30847-472**	**30849-140**	**64560-010**
63:19	**24562-463**			
84:0	**24562-484**			
Countersunk screw with Torx M4 x 14, zinc-plated, PU 100 pieces fixing splitting extrusion/horizontal rail	–	–	–	**24560-145**
Panhead screw M2.5 x 10, St, zinc-plated, PU 100 pieces fixing horizontal rail/splitting extrusion	–	–	–	**24560-179**
Pozidrive/slotted collar screw M2.5 x 12.3, St, nickel-plated, PU 100 pieces	–	**21101-101**	**21101-101**	–
Pozidrive/slotted collar screw M2.5, black, zinc-plated, PU 100 pieces	–	**21101-102**	**21101-102**	–
Washer, 2.7 x 5 x 1, plastic PA 6, PU 100 pieces	–	**21101-121**	**21101-121**	–
Textile gasket, core: foam, sleeve: textile cladding with CuNi coating, UL 94 V-0, PU 10 pieces	–	–	**21101-855**	–

1) SPQ (standard pack quantity): Order number includes 1 piece, but delivery is exclusively made in standard pack quantity (SPQ); please order at least the SPQ quantity or a multiple thereof

- Subdivision of the 6 U assembly area into:
  - 2 x 3 U
  - 1 x 6 U
- Designed to accept Euroboards (100 mm high) and double Euroboards (233.35 mm high)

NOTE

- Please order EMC gasketing kit for horizontal rails separately, see page 5.19
- Please order perforated strips for horizontal rails separately, see page 5.35
- Please order rear centre horizontal rail separately, see page 5.33

Part number in bold face type: ready for despatch within 2 working days
Part number in normal type: ready for despatch within 10 working days

GUIDE RAILS FOR PLUG-IN UNITS AND MODULES, ONE-PIECE, GROOVE WIDTH 2 MM AND 2.5 MM

ORDER INFORMATION

	For plug-in units and frame type plug-in units	
	Standard	With DIN connector fixing as standard
Assembly - can be clipped into Al extruded horizontal rails - can be clipped into 1.5 mm sheet metal **Storage temperature** from -40 °C ... 130 °C	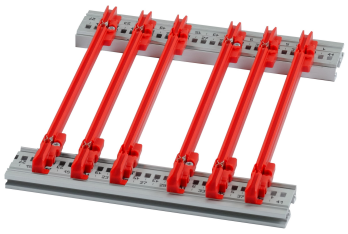 Up to 220 mm length, PC, UL 94 V-0; from 280 mm length, multi-piece,end piece PC, UL 94 V-0, central section Al extrusion	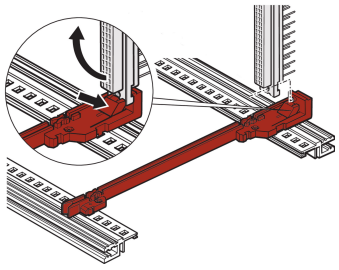 PBT, UL 94 V-0, red, connector is clipped directly onto the guide rails; for euroboards 100 x 160 mm or 100 x 220 mm only 06101501

Board lengths mm	Groove width mm	Colour mm	PU 10 pieces[2]	1 pair (SPQ 10)[1]
70	2	red	–	–
70	2	grey	–	–
160	2	red	**24568-361**	**64560-074**
220	2	red	**24568-362**	**64560-075**
280	2	red	**24568-379**	–
340	2	red	**24568-380**	–
160	2.5	red	–	–
220	2.5	red	–	–

Accessories

Retention screw, PU 100 pieces 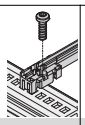	**24560-141**
ESD clip, PU 50 pieces	**24560-255**

1) SPQ (standard pack quantity): Order number includes 1 piece, but delivery is exclusively made in standard pack quantity (SPQ); please order at least the SPQ quantity or a multiple thereof
2) Part no. includes one packing unit (PU); delivery is exclusively made in PU

Description of accessories see from page 6.43 in the EuropacPRO catalog

Desk-top cases – RatiopacPro/ -air

GUIDE RAILS TYPE "ACCESSORIES", ONE-PIECE, GROOVE WIDTH 2 MM AND 2.5 MM

ORDER INFORMATION

	Guide rail type "Accessories"	"Accessories" strengthened	For heavy modules, Al extrusion, silver, robust version
Assembly - can be clipped into horizontal rails in Al extrusion - can be clipped into 1.5 mm sheet metal **Storage temperature** from -40 °C ... +130 °C	 Up to 220 mm length, PC, UL 94 V-0;> 280 mm length, multi-piece,end piece PC, UL 94V-0, middle section Al extrusion	 PC UL 94V-0, red; supportbeam of guide rails adds to strengthening (reinforced)	 Al extrusion; is screwed to horizontal rail "heavy" with retention screws

Board lengths mm	Groove width mm	Colour mm	PU 10 pieces[2]	1 piece (SPQ 50)[1]	1 piece (SPQ 10)[1]
100	2	red	–	–	–
160	2	red	**24568-363**	**64568-076**	–
160	2	grey	–	–	**34562-881**
220	2	red	**24568-364**	**64568-078**	–
220	2	grey	–	–	**34562-882**
280	2	red/silver	**24568-381**	**64568-080**	**34562-883**
340	2	red/silver	**24568-382**	–	**34562-884**
400	2	red/silver	–	–	**34562-885**
160	2.5	red/silver	–	**64568-118**	**34564-881**
220	2.5	red/silver	–	**64568-119**	**34564-882**
280	2.5	red/silver	–	**64568-120**	**34564-883**
340	2.5	silver	–	–	**34564-884**
400	2.5	silver	–	–	**34564-885**

Accessories

Retention screw, PU 100 pieces 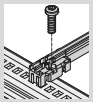	**24560-141**	**24560-141**	**24560-157**
ESD clip, PU 50 pieces	**24560-255**		–
Board locking C, red, PU 10 pieces	**24560-377**		–
Board handle C, red, PU 10 piecesdescription	**24560-378**		–
Identification strips for board handle, red, PU 1 sheet = 438 pieces	**60817-228**		–
Coding see page	6.43		–

1) SPQ (standard pack quantity): Order number includes 1 piece, but delivery is exclusively made in standard pack quantity (SPQ); please order at least the SPQ quantity or a multiple thereof

2) Part no. includes one packing unit (PU); delivery is exclusively made in PU

Description of accessories see from page 6.43 in the EuropacPRO catalog

Desk-top cases – RatiopacPro/ -air

GUIDE RAILS FOR COMPACTPCI, VME64X WITH CODING, 4.4" PCBS, GROOVE WIDTH 2 MM AND 2.5 MM

ORDER INFORMATION

			For CompactPCI, VME64x with coding In accordance with IEEE 1101.10 and IEC 60297-3-103	Offset 0.1" for power supply units in accordance with IEEE 1101.10 and IEC 60297-3-103	For 4.4" PCBs
Assembly - can be clipped into Al extruded horizontal rails - can be clipped into 1.5 mm thick plates **Storage temperature** from -40 °C ... 130 °C			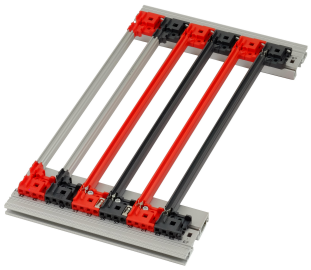 One-piece for groove width 2 mm, PC, UL 94 V-0; multi-piece at groove width 2,5 mm, end-piece PC, UL 94 V-0,center piece Al profile	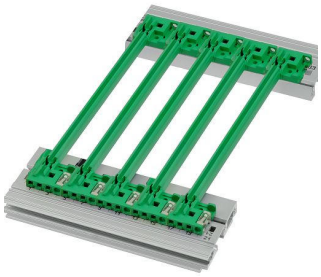 PC, UL 94 V-0, for installation of power supplies in CompactPCI systems or plug-in units with SMD placement	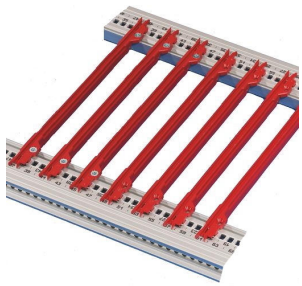 One-piece, PBT, UL 94 V-0; for 4.4" PCBs or drive units
Board lengths mm	Groove width mm	Colour mm	PU 10 pieces[2]	PU 10 pieces[2]	PU 10 pieces
70	2	red	**24568-357**	–	–
70	2	grey	**24568-360**	–	–
160	2	red	**24568-356**	–	**24560-361**
160	2	grey	**24568-358**	–	–
160	2	green	–	**24568-359**	–
220	2	red	–	–	**24560-362**
220	2	grey	–	–	–
220	2	green	–	–	–
160	2.5	red	**64568-109** –	–	–
160	2.5	grey	**64568-110** –	–	–
220	2.5	red	**64568-111**	–	–
220	2.5	grey	**64568-112**	–	–
280	2.5	red	**24568-331**	–	–
280	2.5	grey	**24568-341**	–	–
340	2.5	red	**24568-332**	–	–
340	2.5	grey	**24568-342**	–	–

Accessories

ESD clip, PU 50 pieces	**24560-255**	–	–
ESD clips, for alignment pin, PU 50 pieces	**24560-256**	**24560-256**	–
Retention screw, PU 100 pieces	**24560-141**	**24560-141**	**24560-158**
Coding peg, PU 100 pieces	**20817-501**	**20817-501**	–

1) SPQ (standard pack quantity): Order number includes 1 piece, but delivery is exclusively made in standard pack quantity (SPQ); please order at least the SPQ quantity or a multiple thereof

2) Part no. includes one packing unit (PU); delivery is exclusively made in PU

Description of accessories see from page 6.43 in the EuropacPRO catalog

NOTE

- Reinforcement for plastic profiles (PVC) > 280 mm depth available on request

AIR BAFFLE FOR SLOTS

ORDER INFORMATION

			Air baffle without front panel	Air baffle with front panel U front panel for textile EMC gasket
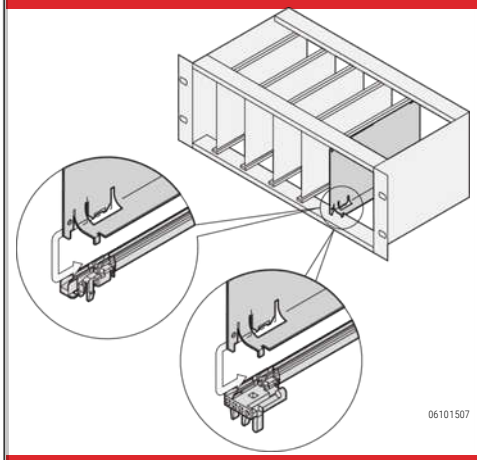			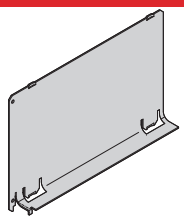 Al, 1 mm, incl. assembly kit; prevents an air short circuit in unoccupied slot positions; is pushed into the groove of the guide rails	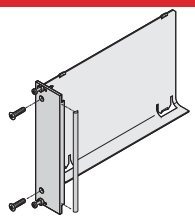 Air deflector, Al, 1 mm, front panel, Al extrusion, 2.5 mm, front anodised, rear conductive; EMC gasket (textile); fixing material kit prevents an air short-circuit where slots are unoccupied; is pushed into the groove of the guide rails
Depth mm	Width HP	Height U	1 piece	1 piece
160	4	3	**34562-823**	**20848-728**
160	4	6	**34562-826**	**20848-736**
220	4	3	**34562-824**	20848-729
220	4	6	34562-827	20848-737

NOTE

- Air baffle for other dimensions for example 280 mm deep, or 8 or 12HP width or for 80 mm rear I/O boards available on request

Part number in bold face type: ready for despatch within 2 working days
Part number in normal type: ready for despatch within 10 working days

Desk-top cases – Introduction

CASE TYPES: DESK-TOP ENCLOSURE/19" CASE



01810002

Desk-top enclosure, ratiopacPRO



02202004

19" case, comptec

Desk-top enclosures

Our desk-top cases are used to house PCBs (euroboards) or individual components

The choice is yours:

- ratiopacPRO, the universal case with 19" compatible dimensions and high EMC shielding,
  e.g. for CompactPCI and VME64x applications
- propacPRO, the robust case with high EMC shielding for 19"-compatible or custom electronics assemblies
- compacPRO, Desk-top or portable case for unshielded applications

19" cases

Our comptec cases are comparable with small cabinets and are used to house 19" components such as subracks, 19" fan trays or 19" front panels

All desk-top enclosures have a very low weight owing to the materials used and are also suitable for mobile use

APPLICATIONS FOR DESK-TOP ENCLOSURES

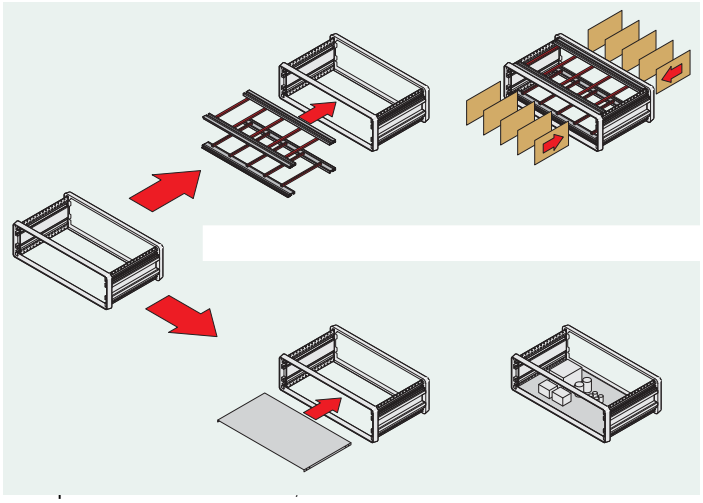

The most important user domains for desk-top enclosures are:

- Fitting with euroboards in accordance with IEC 60297



- Fitting with individual electrical or mechanical components, e.g.on mounting plates



ONE PRODUCT PLATFORM AND EXTENSIVE ACCESSORIES



003

- Practical technology without time-consuming assembly. The modular product platform of these cases allows a wide range of possible uses with only a small number of components.

  The intelligent design of all components results in an astonishingly quick and easy assembly of the components.

  With our PRO product platform we offer you full compatibility of all individual components and accessories, also with our europacPRO subracks.

  Standard desk-top enclosures can also be adapted easily and with little effort for mobile applications.

Desk-top cases – Introduction

FORMS OF DELIVERY FOR DESK-TOP ENCLOSURES

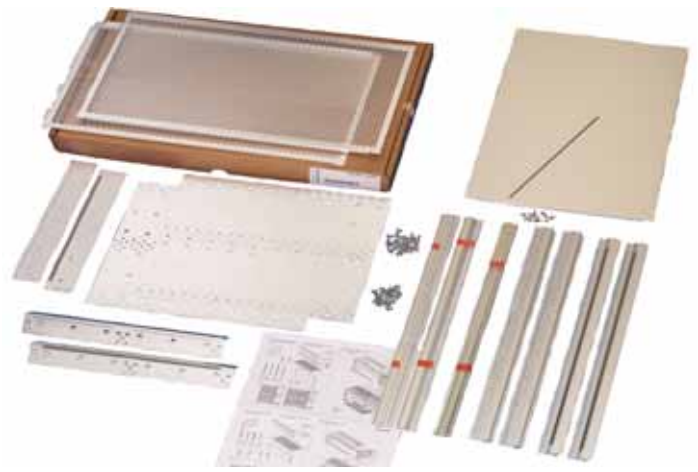

06104001

Flat pack delivery to save space

Supplied in space-saving packs. Simply unpack parts and screw together - done.

Depending on the kit chosen the threaded insert, the perforated rail or the EMC gasket is pre-assembled on the horizontal rail.

We offer you three forms of delivery:

- Pre-assembled kit for use with 160 mm deep euroboards, frame fitted, cladding parts and guide rails supplied loose.
- Pre-assembled kit for individual configuration, frame assembled, cladding parts supplied loose.
- Ready assembled cases to your specifications. With our ServicePLUS option you can order ready-assembled cases, with drilled holes and cut-outs and individual front panels - if necessary even by express service.

GUIDE RAIL

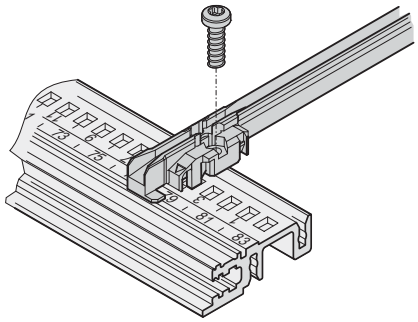

06108084

- Guide rails form the interface between the mechanics of the case and the electronics assembled (PCBs, plug-in units, frame type plug-in units, drive unit modules, etc.).

  Robust snap-in fixings on the plastic rails assure that the components are held securely, even when exposed to vibrations.

  Guide rails can also be screwed on.

EMC AND ESD

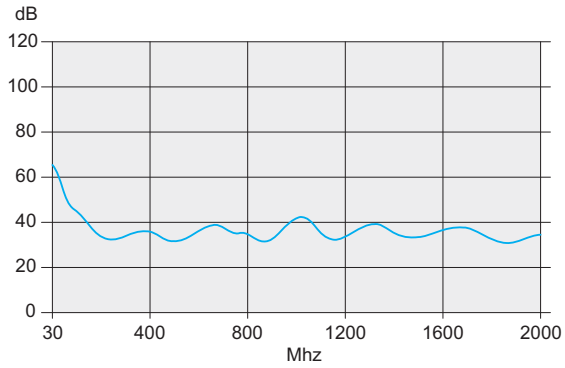

06108081

Shielding

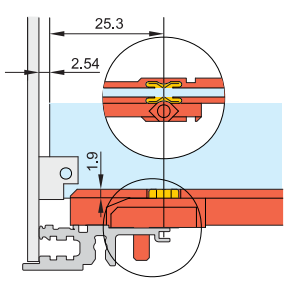

04503050

Position of the ESD clip

- Our case product platforms offer standard solutions for achieving electromagnetic compatibility (EMC) and to avoid electrostatic interference (ESD)
- Shielding on the front and rear of the case is effected by front panels with EMC gaskets
- To prevent electrostatic discharge when inserting PCBs, ESD contacts are clipped into the guide rails. These provide a conductive connection between board and case earth/ground
- Test reports are available on our website www.schroff.biz for download

Part number in bold face type: ready for despatch within 2 working days
Part number in normal type: ready for despatch within 10 working days

Desk-top cases – ServicePLUS

Application examples



01809001

Application: ratiopacPRO-air case in special colour, shielded board cage, filter mat top and bottom



01809003

Application: ratiopacPRO-air case with processed front and rear panels



02009001

Application: compacPRO case, modified



02009003

Application: compacPRO case with fitted horizontal rail with lip and hinged front panel



02009002

Application: compacPRO case with fitted horizontal rail with lip and folding front panel



02009004

Application: compacPRO with tip-up carrying handle and front panel (without visible screws)



02109001

Application: inpac case with hinged and modified front and rear panels



05809005

Application: propacPRO, EMC case in special colour with mounting plates for individual construction

Desk-top cases – ServicePLUS

North America

Warwick, RI, USA
Tel +1.401.738.1722
San Diego, CA, USA
Tel +1.858.740.2400

Europe, Middle East & India

Straubenhardt, Germany
Tel +49 7082 794 0
Betschdorf, France
Tel +33 3 88 90 64 90
Warsaw, Poland
Tel +48 22 209 98 35
Hemel Hempstead,
Great Britain
Tel +44 1442 24 04 71
Lainate, Italy
Tel +39 02 932 714 1
Dubai, United Arab Emirates
Tel +971 4 82 38 666
Bangalore, India
Tel +91 80 6715 8900
Istanbul, Turkey
Tel +90 541 368 0941

Asia Pacific

Shanghai, China
Tel +86 21 2412 6943
Singapore
Tel +65 6768 5800
Shin-Yokohama, Japan
Tel +81 45 476 0271

Our powerful portfolio of brands:

CADDY ERICO HOFFMAN RAYCHEM SCHROFF TRACER

nVent

nVent.com/SCHROFF

©2018 nVent. All nVent marks and logos are owned or licensed by nVent Services GmbH or its affiliates. All other trademarks are the property of their respective owners.
nVent reserves the right to change specifications without notice.