USB Type C Male

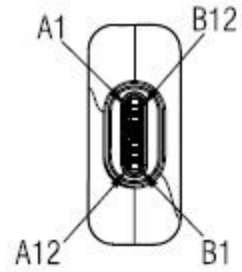

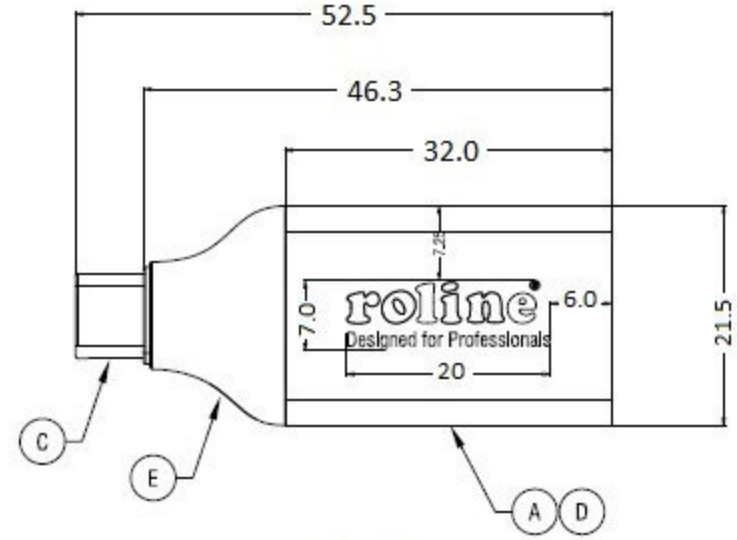

HDMI A Female

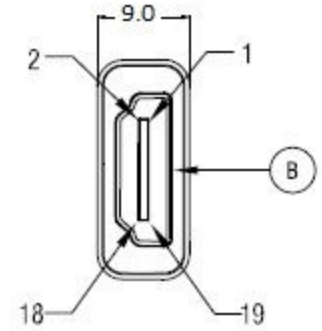

Unit: mm

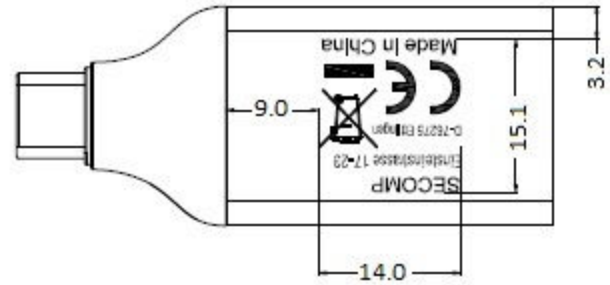





Electrical Test:
1. 100% Test - open, short, miss wire
2. Contact Resistance: 3Ω Max.
3. Insulation Resistance: 5MΩ Min.
4. Hi-Pot: 300V DC/10MS
5. Real Test Passed 3840 x 2160P 60Hz
6. Real Test - Not Twinkling, Double Vision and Decolor

NUMBER	PRODUCT SPECIFICATIONS	Quantity	Unit
E	Black ABS Shell	1	PCS
D	Black Aluminum Shell	1	PCS
C	Type C Male (Black Insulator, Nickel Plated)	1	PCS
B	HDMI A Female (Black Insulator, Nickel Plated)	1	PCS
A	PCB'A	1	PCS

ROLINE USB Type C - HDMI Adapter, M/F, 4K@60Hz, black

Item #	12.03.3226		
Draw	Kobe	Date: 2020.04.07	
Approval			
Duty	F16	BOM.NO:	
Sample NO.		Drawings of 1 (1)	Proportion: 1:1 Unit(mm) A4

SECOMP