



4-Hole Flange with Male Metric Thread and 24° Conical Bore (Shape W acc. to DIN 3861)
GP-LK-L/S — 100



4-Hole 90° Flange with Male Metric Thread and 24° Conical Bore (Shape W acc. to DIN 3861)
WP-3-LK-L/S — 101



3-Hole 90° Flange with Male Metric Thread and 24° Conical Bore (Shape W acc. to DIN 3861)
WP-3-LK-L/S — 102



3-Hole 90° Flange with Female BSPP Thread
WP-3-LK-G — 103



4-Hole 90° Flange with Female BSPP Thread
WP-LK-G — 104



3-Hole 90° Flange with Female BSPP Thread (Aluminium)
WP-3-LK-G-W50 — 105



4-Hole 90° Flange with Female BSPP Thread (Aluminium)
WP-LK-G-W50 — 106



4-Hole Flange with Female BSPP Thread (Flat Style)
GP-FL-LK-G — 107



4-Hole Butt-Weld Flange
GP-LK-ST — 108



4-Hole Flange with Male BSPP Thread and 60° Conical Bore (acc. to BS 5200)
GP-LK-B — 109



4-Hole Flange with Female BSPP Thread
GP-LK-G — 110

F

4-Hole Flange with Male Metric Thread and 24° Conical Bore (acc. to ISO 8434-1) Type GP-LK-L/S



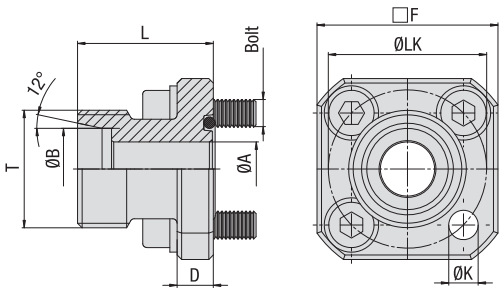

PN[1] (bar/PSI)	Dimensions (mm/in)									Weight (kg/lbs) ca.	Bolts	O-ring	Ordering Codes
8.8	ØLK	ØA	ØB	Series	D	F	L	T (Metric)	ØK	per 100	Metric		
315	35	7	10	L	8	40	30	16x1,5	6,5	13,1	4 x M6x22	20x2,5	GP-LK35-10L-W3-K
4568	1.38	.28	.39		.31	1.57	1.18		.26	28.82			
315	35	9	12	L	8	40	30	18x1,5	6,5	13,5	4 x M6x22	20x2,5	GP-LK35-12L-W3-K
4568	1.38	.35	.47		.31	1.57	1.18		.26	29.70			
250	35	11	15	L	8	40	30	22x1,5	6,5	14,8	4 x M6x22	20x2,5	GP-LK35-15L-W3-K
3625	1.38	.43	.59		.31	1.57	1.18		.26	32.56			
250	35	12	18	L	8	40	30	26x1,5	6,5	15,3	4 x M6x22	20x2,5	GP-LK35-18L-W3-K
3625	1.38	.47	.71		.31	1.57	1.18		.26	33.66			
315	35	12	16	S	8	40	30	24x1,5	6,5	14,5	4 x M6x22	20x2,5	GP-LK35-16S-W3-K
4568	1.38	.47	.63		.31	1.57	1.18		.26	31.90			
100	40	11	15	L	8	40	35	22x1,5	6,5	15,7	4 x M6x22	26x2,5	GP-LK40-15L-W3-K
1450	1.57	.43	.59		.31	1.57	1.38		.26	34.54			
100	40	14	18	L	8	40	35	26x1,5	6,5	16,8	4 x M6x22	26x2,5	GP-LK40-18L-W3-K
1450	1.57	.55	.71		.31	1.57	1.38		.26	36.96			
100	40	18	22	L	8	40	35	30x2	6,5	16,3	4 x M6x22	26x2,5	GP-LK40-22L-W3-K
1450	1.57	.71	.87		.31	1.57	1.38		.26	35.86			
100	40	19	28	L	8	40	35	36x2	6,5	18,0	4 x M6x22	26x2,5	GP-LK40-28L-W3-K
1450	1.57	.75	1.10		.31	1.57	1.38		.26	39.60			
100	55	25	28	L	12	55	35	36x2	8,5	34,3	4 x M8x25	32x2,5	GP-LK55-28L-W3-K
1450	2.17	.98	1.10		.47	2.17	1.38		.33	75.46			
100	55	25	35	L	12	55	50	45x2	8,5	50,2	4 x M8x25	32x2,5	GP-LK55-35L-W3-K
1450	2.17	.98	1.38		.47	2.17	1.97		.33	110.44			
250	55	16	20	S	12	55	35	30x2	8,5	42,9	4 x M8x25	32x2,5	GP-LK55-20S-W3-K
3625	2.17	.63	.79		.47	2.17	1.38		.33	94.38			

F

Materials / Ordering Options / Examples

* Kit with 4-Hole Flange made of Steel S355J2 or equivalent, zinc/nickel-plated including Metric bolts 10.9, spring rings, O-ring made of NBR (Buna-N®) **GP-LK...-...-W3-K**

Please always indicate ØLK, ØB and Series.

[1] The maximum working pressure PN (bar/PSI) applies only to the flange itself. The actual maximum working pressure depends on the thickness and the quality of the tube used.

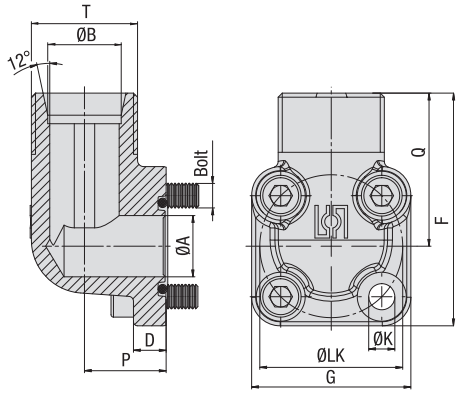

4-Hole 90° Flange with Male Metric Thread and 24° Conical Bore (acc. to ISO 8434-1) Type WP-LK-L/S



PN[1] (bar/PSI)	Dimensions (mm/in)											Weight (kg/lbs) ca.	Bolts	O-ring	Ordering Codes
8.8	ØLK	ØA	ØB	Series	D	F	G	P	Q	T (Metric)	ØK	per 100	Metric		
315	35	14	10	L	8	57	39	16,5	37,5	16x1,5	6,4	18,4	2 x M6x22	20x2,5	WP-LK35-10L-W3-K
4568	1.38	.55	.39		.31	2.24	1.54	.65	1.48		.25	40.48	2 x M6x35		
315	35	14	12	L	8	57	39	16,5	37,5	18x1,5	6,4	19,2	2 x M6x22	20x2,5	WP-LK35-12L-W3-K
4568	1.38	.55	.47		.31	2.24	1.54	.65	1.48		.25	42.24	2 x M6x35		
250	35	14	15	L	8	56,5	39	16,5	37,5	22x1,5	6,4	20,2	2 x M6x22	20x2,5	WP-LK35-15L-W3-K
3625	1.38	.55	.59		.31	2.22	1.54	.65	1.48		.25	44.44	2 x M6x35		
250	35	15	18	L	8	57	39	20	37,5	26x1,5	6,4	22,0	2 x M6x22	20x2,5	WP-LK35-18L-W3-K
3625	1.38	.59	.71		.31	2.24	1.54	.79	1.48		.25	48.40	2 x M6x40		
315	35	15	16	S	8	57,5	39	20	38	24x1,5	6,4	25,3	2 x M6x22	20x2,5	WP-LK35-16S-W3-K
4568	1.38	.59	.63		.31	2.26	1.54	.79	1.50		.25	55.66	2 x M6x40		
315	35	15	20	S	8	64,5	39	25	45	30x2	6,4	30,3	2 x M6x22	20x2,5	WP-LK35-20S-W3-K
4568	1.38	.59	.79		.31	2.54	1.54	.98	1.77		.25	66.66	2 x M6x45		
100	40	20	15	L	9	58	42	22,5	37	22x1,5	6,4	26,0	4 x M6x22	26x2,5	WP-LK40-15L-W3-K
1450	1.57	.79	.59		.35	2.28	1.65	.89	1.46		.25	57.14			
100	40	20	18	L	9	59	42	22,5	38	26x1,5	6,4	26,8	4 x M6x22	26x2,5	WP-LK40-18L-W3-K
1450	1.57	.79	.71		.35	2.32	1.65	.89	1.50		.25	58.96			
100	40	20	22	L	9	59	42	22,5	38	30x2	6,4	26,7	4 x M6x22	26x2,5	WP-LK40-22L-W3-K
1450	1.57	.79	.87		.35	2.32	1.65	.89	1.50		.25	58.84			
100	40	20	28	L	9	61	42	28	40	36x2	6,4	36,9	2 x M6x22	26x2,5	WP-LK40-28L-W3-K
1450	1.57	.79	1.10		.35	2.40	1.65	1.10	1.57		.25	81.27	2 x M6x50		
100	40	20	35	L	9	62	42	34	41	45x2	6,4	40,6	2 x M6x22	26x2,5	WP-LK40-35L-W3-K
1450	1.57	.79	1.38		.35	2.44	1.65	1.34	1.61		.25	89.32	2 x M6x60		
250	40	20	20	S	9	61	42	22,5	40	30x2	6,4	25,9	2 x M6x22	26x2,5	WP-LK40-20S-W3-K
3625	1.57	.79	.79		.35	2.40	1.65	.89	1.57		.25	56.98	2 x M6x45		
100	55	26,5	35	L	12	78	58	32	49	45x2	8,4	76,6	2 x M8x25	32x2,5	WP-LK55-35L-W3-K
1450	2.17	1.04	1.38		.47	3.07	2.28	1.26	1.93		.33	168.52	2 x M8x60		
100	55	26,5	42	L	12	78	58	40	49	52x2	8,4	103,6	2 x M8x25	32x2,5	WP-LK55-42L-W3-K
1450	2.17	1.04	1.65		.47	3.07	2.28	1.57	1.93		.33	227.88	2 x M8x70		
250	55	18,2	20	S	13	69	58	24	45	30x2	8,4	61,7	2 x M8x25	32x2,5	WP-LK55-20S-W3-K
3625	2.17	.72	.79		.51	2.72	2.28	.94	1.77		.33	135.70	2 x M8x50		
250	55	26,5	25	S	13	78	58	30	49	36x2	8,4	62,0	2 x M8x25	32x2,5	WP-LK55-25S-W3-K
3625	2.17	1.04	.98		.51	3.07	2.28	1.18	1.93		.33	136.40	2 x M8x55		
250	55	26,5	30	S	12	78	58	32	49	42x2	8,4	63,2	2 x M8x25	32x2,5	WP-LK55-30S-W3-K
3625	2.17	1.04	1.18		.47	3.07	2.28	1.26	1.93		.33	139.04	2 x M8x50		

[1] The maximum working pressure PN (bar/PSI) applies only to the flange itself. The actual maximum working pressure depends on the thickness and the quality of the tube used.

Materials / Ordering Options / Examples

* Kit with 4-Hole Flange made of Steel S355J2 or equivalent, zinc/nickel-plated including Metric bolts 10.9, spring rings, O-ring made of NBR (Buna-N®) **WP-LK...-...-W3-K**

Please always indicate ØLK, ØB and Series.

F

3-Hole 90° Flange with Male Metric Thread and 24° Conical Bore (acc. to ISO 8434-1) Type WP-3-LK-L/S



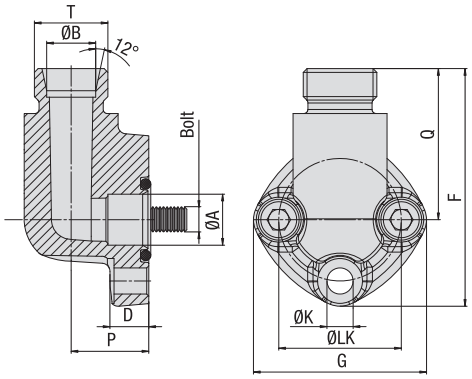

PN[1] (bar/PSI)	Dimensions (mm/in)											Weight (kg/lbs) ca.	Bolts	O-ring	Ordering Codes
8.8	ØLK	ØA	ØB		D	F	G	P	Q	T (Metric)	ØK	per 100	Metric		
250	30	12,5	12	L	9	58	42,5	19	37	18x1,5	6,4	17,7	3 x M6x25	16x2,5	WP-3-LK30-12L-W3-K
3625	1.18	.49	.47		.35	2.28	1.67	.75	1.46		.25	38.94			
250	30	12,5	15	L	9	58	42,5	19	37	22x1,5	6,4	19,5	3 x M6x25	16x2,5	WP-3-LK30-15L-W3-K
3625	1.18	.49	.59		.35	2.28	1.67	.75	1.46		.25	42.96			
160	40	19	22	L	12	70	54	25	43	30x2	8,4	40,4	3 x M8x30	24x2,5	WP-3-LK40-22L-W3-K
2320	1.57	.75	.87		.47	2.76	2.13	.98	1.69		.33	88.88			
160	40	19	28	L	12	70	54	25	43	36x2	8,4	35,7	3 x M8x30	24x2,5	WP-3-LK40-28L-W3-K
2320	1.57	.75	1.10		.47	2.76	2.13	.98	1.69		.33	78.54			

F

Materials / Ordering Options / Examples

* Kit with 3-Hole Flange made of Steel S355J2 or equivalent, zinc/nickel-plated including Metric bolts 10.9, spring rings, O-ring made of NBR (Buna-N®) **WP-3-LK...-...-W3-K**

Please always indicate ØLK, ØB and Series.

[1] The maximum working pressure PN (bar/PSI) applies only to the flange itself. The actual maximum working pressure depends on the thickness and the quality of the tube used.

3-Hole 90° Flange with Female BSPP Thread
Type WP-3-LK-G

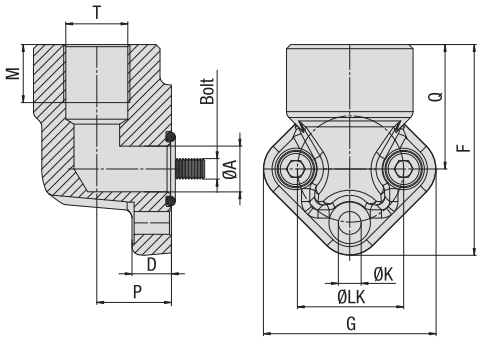



PN[1] (bar/PSI)	Dimensions (mm/in)										Weight (kg/lbs) ca.	Bolts	O-ring	Ordering Codes
8.8	ØLK	ØA	D	F	G	M	P	Q	T (BSPP)	ØK	per 100	Metric		
300	26	11,5	9,5	51	42	14	18	30	3/8 (06)	5,5	9,1	3 x M5x20	14x1,78	WP-3-LK26-G06-W3-K
4350	1.02	.45	.37	2.01	1.65	.55	.71	1.18		.22	20.02			
300	26	11,5	9,5	51	42	14	18	30	1/2 (08)	5,5	8,6	3 x M5x20	14x1,78	WP-3-LK26-G08-W3-K
4350	1.02	.45	.37	2.01	1.65	.55	.71	1.18		.22	18.92			
300	30	11,5	9,5	51	42	14	18	30	3/8 (06)	6,5	12,0	3 x M6x20	16x2,5	WP-3-LK30-G06-W3-K
4350	1.18	.45	.37	2.01	1.65	.55	.71	1.18		.26	26.40			
300	30	11,5	9,5	51	42	14	18	30	1/2 (08)	6,5	11,2	3 x M6x20	16x2,5	WP-3-LK30-G08-W3-K
4350	1.18	.45	.37	2.01	1.65	.55	.71	1.18		.26	24.64			
300	40	18	11,5	68	61	18	23	38	1/2 (08)	8,5	24,0	3 x M8x25	24x2,5	WP-3-LK40-G08-W3-K
4350	1.57	.71	.45	2.68	2.40	.71	.91	1.50		.33	52.80			
300	40	18	11,5	68	61	22	23	38	3/4 (12)	8,5	22,8	3 x M8x25	24x2,5	WP-3-LK40-G12-W3-K
4350	1.57	.71	.45	2.68	2.40	.87	.91	1.50		.33	50.16			
300	51	25	13,5	84	75	22	27	47	3/4 (12)	10,5	49,8	3 x M10x30	32x2,5	WP-3-LK51-G12-W3-K
4350	2.01	.98	.53	3.31	2.95	.87	1.06	1.85		.41	109.56			
300	51	25	13,5	84	75	27	27	47	1 (16)	10,5	46,4	3 x M10x30	32x2,5	WP-3-LK51-G16-W3-K
4350	2.01	.98	.53	3.31	2.95	1.06	1.06	1.85		.41	102.08			
300	56	34	13,5	84	75	22	27	47	3/4 (12)	10,5	69,4	3 x M10x30	38x2,5	WP-3-LK56-G12-W3-K
4350	2.20	1.34	.53	3.31	2.95	.87	1.06	1.85		.41	152.68			
300	56	34	13,5	84	75	27	27	47	1 (16)	10,5	60,7	3 x M10x30	38x2,5	WP-3-LK56-G16-W3-K
4350	2.20	1.34	.53	3.31	2.95	1.06	1.06	1.85		.41	133.54			

[1] The maximum working pressure PN (bar/PSI) applies only to the flange itself. The actual maximum working pressure depends on the thickness and the quality of the tube used.

Materials / Ordering Options / Examples

* Kit with 3-Hole Flange made of Steel S355J2 or equivalent, zinc/nickel-plated including Metric bolts 10.9, spring rings, O-ring made of NBR (Buna-N®) **WP-3-LK...-G**-W3-K**

Please always indicate ØLK and Thread Size.

F

4-Hole 90° Flange with Female BSPP Thread
Type WP-LK-G



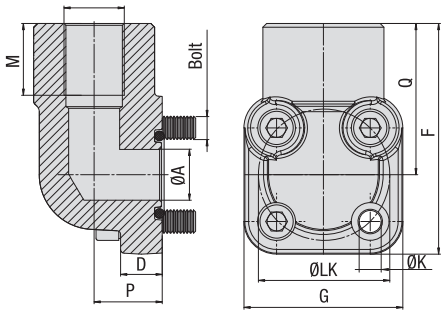

PN[1] (bar/PSI)	Dimensions (mm/in)										Weight (kg/lbs) ca.	Bolts	O-ring	Ordering Codes
8.8	ØLK	ØA	D	F	G	M	P	Q	T (BSPP)	ØK	per 100	Metric		
300	35	13,5	11	61	42	19	18	40	3/8 (06)	6,5	33,1	2 x M6x20	19x2,5	WP-LK35-G06-W3-K
4350	1.38	.53	.43	2.40	1.65	.75	.71	1.57		.26	72.82	2 x M6x35		
300	35	13,5	11	61	42	19	18	40	1/2 (08)	6,5	32,3	2 x M6x20	19x2,5	WP-LK35-G08-W3-K
4350	1.38	.53	.43	2.40	1.65	.75	.71	1.57		.26	71.06	2 x M6x35		
300	40	20	10	67,5	45	19	24	45	1/2 (08)	6,5	38,3	2 x M6x25	24x2,5	WP-LK40-G08-W3-K
4350	1.57	.79	.39	2.66	1.77	.75	.94	1.77		.26	84.26	2 x M6x45		
300	40	20	10	67,5	45	20	24	45	3/4 (12)	6,5	35,7	2 x M6x25	24x2,5	WP-LK40-G12-W3-K
4350	1.57	.79	.39	2.66	1.77	.79	.94	1.77		.26	78.49	2 x M6x45		
300	40	20	10	67,5	45	22	24	45	1 (16)	6,5	48,3	2 x M6x25	24x2,5	WP-LK40-G16-W3-K
4350	1.57	.79	.39	2.66	1.77	.87	.94	1.77		.26	106.26	2 x M6x55		
250	55	25	13	83,5	59	22	35	54	1 (16)	8,5	82,3	2 x M8x25	32x2,5	WP-LK55-G16-W3-K
3625	2.17	.98	.51	3.29	2.32	.87	1.38	2.13		.33	181.06	2 x M8x60		
250	55	25	13	83,5	59	25	35	54	1-1/4 (20)	8,5	107,2	2 x M8x25	32x2,5	WP-LK55-G20-W3-K
3625	2.17	.98	.51	3.29	2.32	.98	1.38	2.13		.33	235.84	2 x M8x70		

F

Materials / Ordering Options / Examples

* Kit with 4-Hole Flange made of Steel S355J2 or equivalent, zinc/nickel-plated including Metric bolts 10.9, spring rings, O-ring made of NBR (Buna-N®) **WP-LK...-G**-W3-K**

Please always indicate ØLK and Thread Size.

[1] The maximum working pressure PN (bar/PSI) applies only to the flange itself. The actual maximum working pressure depends on the thickness and the quality of the tube used.

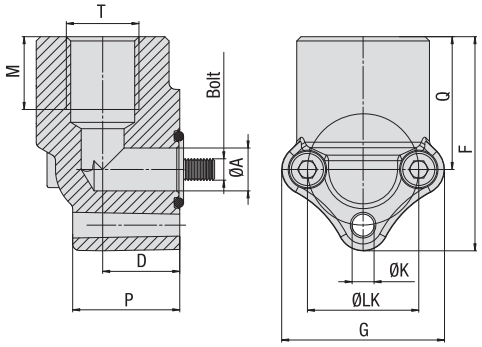

3-Hole 90° Flange with Female BSPP Thread (Aluminium) Type WP-3-LK-G-W50



PN[1] (bar/PSI)	Dimensions (mm/in)										Weight (kg/lbs) ca.	Bolts	O-ring	Ordering Codes
8.8	ØLK	ØA	D	F	G	M	P	Q	T (BSPP)	ØK	per 100	Metric		
180	26	10	25	50	38	17	18	31	3/8 (06)	6	9,1	3 x M5x35	14x1,78	**WP-3-LK26-G06-W50-K**
2610	1.02	.39	.98	1.97	1.50	.67	.71	1.22		.24	20.02			
180	26	10	25	50	38	18	18	31	1/2 (08)	6	8,6	3 x M5x35	14x1,78	**WP-3-LK26-G08-W50-K**
2610	1.02	.39	.98	1.97	1.50	.71	.71	1.22		.24	18.92			
180	30	12,5	26	53	40	17	18	31	3/8 (06)	7	12,0	3 x M6x35	15,88x2,62	**WP-3-LK30-G06-W50-K**
2610	1.18	.49	1.02	2.09	1.57	.67	.71	1.22		.28	26.40			
180	30	12,5	26	53	44	18	18	31	1/2 (08)	7	11,2	3 x M6x35	15,88x2,62	**WP-3-LK30-G08-W50-K**
2610	1.18	.49	1.02	2.09	1.73	.71	.71	1.22		.28	24.64			
180	40	18	31	68	56	18	21,5	40	1/2 (08)	9,5	24,0	3 x M8x45	21,89x2,62	**WP-3-LK40-G08-W50-K**
2610	1.57	.71	1.22	2.68	2.20	.71	.85	1.57		.37	52.80			
180	40	18	31	68	56	22	21,5	40	3/4 (12)	9,5	22,8	3 x M8x45	21,89x2,62	**WP-3-LK40-G12-W50-K**
2610	1.57	.71	1.22	2.68	2.20	.87	.85	1.57		.37	50.16			
180	51-56	24,5	42	85	78	22	26	46	3/4 (12)	11	49,8	3 x M10x60	29,74x2,62	**WP-3-LK51-G12-W50-K**
2610	2.01-2.20	.96	1.65	3.35	3.07	.87	1.02	1.81		.43	109.56			
180	51-56	24,5	42	85	78	27	26	46	1 (16)	11	46,4	3 x M10x60	29,74x2,62	**WP-3-LK51-G16-W50-K**
2610	2.01-2.20	.96	1.65	3.35	3.07	1.06	1.02	1.81		.43	102.08			

[1] The maximum working pressure PN (bar/PSI) applies only to the flange itself. The actual maximum working pressure depends on the thickness and the quality of the tube used.

Materials / Ordering Options / Examples

* Kit with 3-Hole Flange made of Aluminium [EN AC-Al Si9Cu(Fe)] including Metric bolts 10.9, spring rings, O-ring made of NBR (Buna-N®) **WP-3-LK...-G**-W50-K**

Please always indicate ØLK and Thread Size.

4-Hole 90° Flange with Female BSPP Thread (Aluminium) Type WP-LK-G-W50



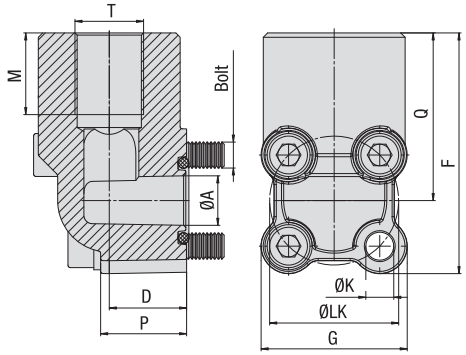

PN[1] (bar/PSI)	Dimensions (mm/in)										Weight (kg/lbs) ca.	Bolts	O-ring	Ordering Codes
8.8	ØLK	ØA	D	F	G	M	P	Q	T (BSPP)	ØK	per 100	Metric		
180	30	11,5	20	56	34	19	18	39	3/8 (06)	6,5	14,3	2 x M6x30	15,88x2,62	WP-LK30-G06-W50-K
2610	1.18	.45	.79	2.20	1.34	.75	.71	1.54		.26	31.46	2 x M6x40		
180	30	11,5	20	56	34	19	18	39	1/2 (08)	6,5	13,8	2 x M6x30	15,88x2,62	WP-LK30-G08-W50-K
2610	1.18	.45	.79	2.20	1.34	.75	.71	1.54		.26	30.36	2 x M6x40		
180	35	14	20	61,5	38	19	18	42,5	3/8 (06)	6,5	85,8	2 x M6x30	18,72x2,62	WP-LK35-G06-W50-K
2610	1.38	.55	.79	2.42	1.50	.75	.71	1.67		.26	188.76	2 x M6x40		
180	35	14	20	61,5	38	19	18	42,5	1/2 (08)	6,5	14,2	2 x M6x30	18,72x2,62	WP-LK35-G08-W50-K
2610	1.38	.55	.79	2.42	1.50	.75	.71	1.67		.26	31.24	2 x M6x40		
180	40	18	28	69	43	19	24	47,5	1/2 (08)	6,5	21,8	2 x M6x40	21,89x2,62	WP-LK40-G08-W50-K
2610	1.57	.71	1.10	2.72	1.69	.75	.94	1.87		.26	47.96	2 x M6x50		
180	40	18	28	69	43	20	24	47,5	3/4 (12)	6,5	22,0	2 x M6x40	21,89x2,62	WP-LK40-G12-W50-K
2610	1.57	.71	1.10	2.72	1.69	.79	.94	1.87		.26	48.40	2 x M6x50		
180	55	24,5	31	83	58	20	29	54	3/4 (12)	8,5	42,4	2 x M8x45	29,74x2,62	WP-LK55-G12-W50-K
2610	2.17	.96	1.22	3.27	2.28	.79	1.14	2.13		.33	93.28	2 x M8x60		
180	55	24,5	31	83	58	22	29	54	1 (16)	8,5	41,0	2 x M8x45	29,74x2,62	WP-LK55-G16-W50-K
2610	2.17	.96	1.22	3.27	2.28	.87	1.14	2.13		.33	90.20	2 x M8x60		

Materials / Ordering Options / Examples

* Kit with 4-Hole Flange made of Aluminium [EN AC-Al Si9Cu(Fe)] including Metric bolts 10.9, spring rings, O-ring made of NBR (Buna-N®) — **WP-LK...-G**-W50-K**

Please always indicate ØLK and Thread Size.

[1] The maximum working pressure PN (bar/PSI) applies only to the flange itself. The actual maximum working pressure depends on the thickness and the quality of the tube used.

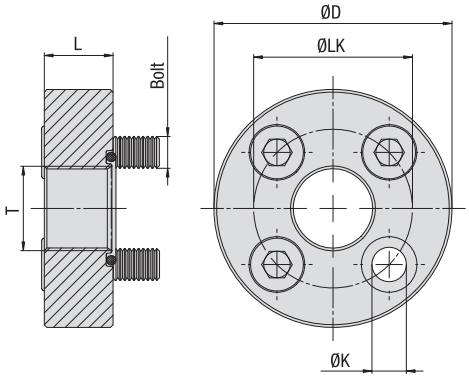

4-Hole Flange with Female BSPP Thread (Flat Style) Type GP-FL-LK-G



PN[1] (bar/PSI)	Dimensions (mm/in)					Weight (kg/lbs) ca.	Bolts	O-ring	Ordering Codes
8.8	ØLK	ØD	L	T (BSPP)	ØK	per 100	Metric		
250	30	45	13	3/8 (06)	6,5	14,3	M6x16	18,77x1,78	GP-FL-LK30-G06-W129-K
3625	1.18	1.77	.51		.26	31.46			
250	40	58	15	1/2 (08)	8,5	27,4	M8x20	25,12x1,78	GP-FL-LK40-G08-W129-K
3625	1.57	2.28	.59		.33	60.28			
250	51	75	18	3/4 (12)	10,5	55,3	M10x25	31,42x2,62	GP-FL-LK51-G12-W129-K
3625	2.01	2.95	.71		.41	121.66			
250	56	75	18	3/4 (12)	10,5	55,4	M10x25	31,42x2,62	GP-FL-LK56-G12-W129-K
3625	2.20	2.95	.71		.41	121.88			
180	62	88	20	1 (16)	10,5	82,0	M10x25	39,69x3,53	GP-FL-LK62-G16-W129-K
2610	2.44	3.46	.79		.41	180.40			
180	62	88	20	1 (16)	12,5	81,5	M12x25	39,69x3,53	GP-FL-LK62-G16-M12-W129-K
2610	2.44	3.46	.79		.49	179.30			
180	72,5	98	22	1-1/4 (20)	12,5	106,6	M12x30	47,22x3,53	GP-FL-LK72.5-G20-W129-K
2610	2.85	3.86	.87		.49	234.52			

[1] The maximum working pressure PN (bar/PSI) applies only to the flange itself. The actual maximum working pressure depends on the thickness and the quality of the tube used.

Materials / Ordering Options / Examples

* Kit with 4-Hole Flange made of Steel S355J2 or equivalent, zinc-plated and thick-film-passivated **GP-LK...-G**-W129-K** including Metric bolts 10.9, O-ring made of NBR (Buna-N®)

Please always indicate ØLK and Thread Size.

4-Hole Butt-Weld Flange
Type GP-LK-ST



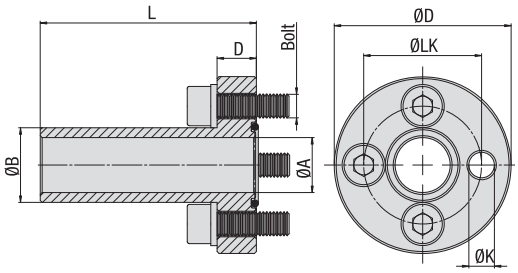

PN[1] (bar/PSI)	Dimensions (mm/in)							Weight (kg/lbs) ca.	Bolts	O-ring	Ordering Codes
8.8	ØLK	ØA	ØB	D	ØD	L	ØK	per 100	Metric		
250	30	14	19	10	45	55	6,5	17,9	M6x20	18,77x1,78	GP-LK30-ST-19/14-W1-K
3625	1.18	.55	.75	.39	1.77	2.17	.26	39.38			
250	40	19	25,4	12	58	60	8,5	34,9	M8x25	25,12x1,78	GP-LK40-ST-25.4/19-W1-K
3625	1.57	.75	1.00	.47	2.28	2.36	.33	76.78			
250	51	24,5	32	16	76	72	10,5	74,4	M10x35	31,42x2,62	GP-LK51-ST-32/24.5-W1-K
3625	2.01	.96	1.26	.63	2.99	2.83	.41	163.68			
250	56	24,5	32	16	76	72	10,5	74,2	M10x35	31,42x2,62	GP-LK56-ST-32/24.5-W1-K
3625	2.20	.96	1.26	.63	2.99	2.83	.41	163.24			

F

Materials / Ordering Options / Examples

* Kit with 4-Hole Flange made of Steel S355J2 or equivalent, blank (oiled) including Metric bolts 10.9, spring rings, O-ring made of NBR (Buna-N®) — **GP-LK...-ST-**/**-W1-K**

Please always indicate ØLK, ØB and ØA.

[1] The maximum working pressure PN (bar/PSI) applies only to the flange itself. The actual maximum working pressure depends on the thickness and the quality of the tube used.

4-Hole Flange with Male BSPP Thread and 60° Conical Bore (acc. to BS 5200) Type GP-LK-B

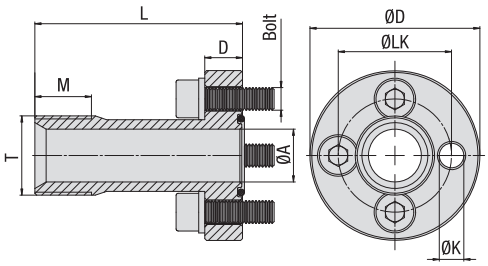



PN[1] (bar/PSI)	Dimensions (mm/in)								Weight (kg/lbs) ca.	Bolts	O-ring	Ordering Codes
8.8	ØLK	ØA	D	ØD	L	M	T (BSPP)	ØK	per 100	Metric		
250	30	14	10	45	55	15	1/2 (08)	6,5	17,1	M6x20	18,77x1,78	GP-LK30-B08-W129-K
3625	1.18	.55	.39	1.77	2.17	.59		.26	37.62			
250	40	19	12	58	60	16	3/4 (12)	8,5	33,8	M8x25	25,12x1,78	GP-LK40-B12-W129-K
3625	1.57	.75	.47	2.28	2.36	.63		.33	74.36			
250	51	24	16	76	72	19	1 (16)	10,5	71,3	M10x35	31,42x2,62	GP-LK51-B16-W129-K
3625	2.01	.94	.63	2.99	2.83	.75		.41	156.86			
250	56	24	16	76	72	19	1 (16)	10,5	71,5	M10x35	31,42x2,62	GP-LK56-B16-W129-K
3625	2.20	.94	.63	2.99	2.83	.75		.41	157.30			

F

[1] The maximum working pressure PN (bar/PSI) applies only to the flange itself. The actual maximum working pressure depends on the thickness and the quality of the tube used.

Materials / Ordering Options / Examples

* Kit with 4-Hole Flange made of Steel S355J2 or equivalent, zinc-plated and thick-film-passivated **GP-LK...-B**-W129-K** including Metric bolts 10.9, spring rings, O-ring made of NBR (Buna-N®)

Please always indicate ØLK and Thread Size.

4-Hole Flange with Female BSPP Thread
Type GP-LK-G



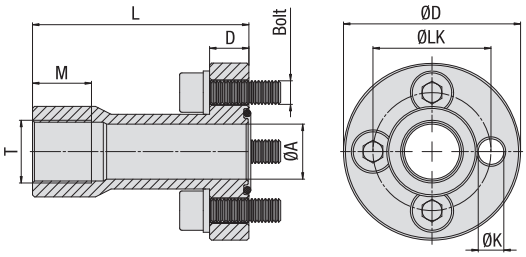

PN[1] (bar/PSI)	Dimensions (mm/in)								Weight (kg/lbs) ca.	Bolts	O-ring	Ordering Codes
8.8	ØLK	ØA	D	ØD	L	M	T (BSPP)	ØK	per 100	Metric		
250	30	14	10	45	55	15	3/8 (06)	6,5	18,7	M6x20	18,77x1,78	**GP-LK30-G06-W129-K**
3625	1.18	.55	.39	1.77	2.17	.59		.26	41.14			
250	40	19	12	58	60	16	1/2 (08)	8,5	35,4	M8x25	25,12x1,78	**GP-LK40-G08-W129-K**
3625	1.57	.75	.47	2.28	2.36	.63		.33	77.88			
250	51	24,5	16	76	72	19	3/4 (12)	10,5	74,1	M10x35	31,42x2,62	**GP-LK51-G12-W129-K**
3625	2.01	.96	.63	2.99	2.83	.75		.41	163.02			
250	56	24,5	16	76	72	19	3/4 (12)	10,5	74,3	M10x35	31,42x2,62	**GP-LK56-G12-W129-K**
3625	2.20	.96	.63	2.99	2.83	.75		.41	163.46			

F

Materials / Ordering Options / Examples

* Kit with 4-Hole Flange made of Steel S355J2 or equivalent, zinc-plated and thick-film-passivated **GP-LK...-G**-W129-K** including Metric bolts 10.9, spring rings, O-ring made of NBR (Buna-N®)

Please always indicate ØLK and Thread Size.

[1] The maximum working pressure PN (bar/PSI) applies only to the flange itself. The actual maximum working pressure depends on the thickness and the quality of the tube used.