isolating switches
selection chart

VISTOP VISIBLE LOAD BREAK SWITCHES



Rating (A)	Black handle			
	Front handle		Side handle	
	3 P	4 P	3 P	4 P
63	225 12	225 15	225 16	225 18
100	225 20	225 22	225 25	225 27
125	225 34	225 39	225 44	225 46
160	225 51	225 53	225 54	225 56

DPX-IS VISIBLE LOAD BREAK SWITCHES





Rating (A)	Without release					
	Front handle		Right-hand side handle		Left-hand side handle	
	3 P	4 P	3 P	4 P	3 P	4 P
160	266 02		266 12		266 22	
250	266 03	266 07	266 13	266 17	266 23	266 27
400	266 60	266 62	266 64	266 66	266 68	266 70
630	266 61	266 63	266 65	266 67	266 69	266 71
800	265 91	265 95	with release			
1 000	265 92	265 96	with release			
1 250	265 93	265 97	with release			
1 600	265 94	265 98	with release			

DPX-I TRIP-FREE SWITCHES



Rating (A)	Devices	3 P
125	DPX-I 125	250 98
160	DPX-I 160	251 98
250	DPX-I 250 ER	252 98
250	DPX-I 250	253 98
400	DPX-I 630	255 86
630	DPX-I 630	255 88
800	DPX-I 1 600	257 94
1 250	DPX-I 1 600	257 96
1 600	DPX-I 1 600	257 98

DX-IS ISOLATING SWITCHES



Rating (A)	Without release			
	1 P	2 P	3 P	4 P
16	043 01	043 21		
20	043 02	043 22	043 42	043 62
32	043 05	043 25	043 45	043 65
40	043 07	043 27	043 47	043 67
63	043 10	043 30	043 50	043 70
100	043 14	043 34	043 54	043 74
125		043 38	043 58	043 78

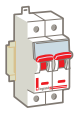

DX-IS
- Isolation with positive contact indication from 16 to 125 A
- Tripping version (common DX auxiliaries)
- Red handle: main device
- Faulty contact indicator
- Fixing on rail ⊓

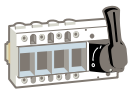

VISTOP
- Isolation with visible contact indication from 63 to 160 A
- Fixing on ⊓ rail or on plate
- External reversible side handle or front handle

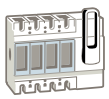

DPX-IS
- Isolation with visible contact indication from 160 to 1 600 A
- Fixing on ⊔ rail or on plate up to 250 A. Above 250 A, fix on plate
- Tripping version (common DPX auxiliaries)

Some items sold separately
For pack quantity, please refer to numerical index pages
For trade price, please see your local HPM Legrand representative for the current price list

DPX-I 125 to 1 600 A
trip-free switches



250 98



255 88

Conform to IEC 60947-3
Category of use AC 23 A
Can be associated to earth leakage modules or to corresponding DPX residual current relays
Mount on rail 2 up to DPX 250 ER
Connection identical to corresponding DPX

Pack	Cat.No	DPX-I 125
	3P	In
1	250 98	125 A

		DPX-I 250 ER
	3P	In
1	251 98	160 A

		DPX-I 250 ER
	3P	In
1	252 96	160 A
1	252 98	250 A

		DPX-I 250
	3P	In
1	253 98	250 A

		DPX-I 630
	3P	In
1	255 86	400 A
1	255 88	630 A

		DPX-I 1 600
	3P	In
1	257 96	1 250 A
1	257 98	1 600 A

Vistop™ 63 to 160 A
visible load break isolating switches, screws or ⊔ rail fixing din-rail mounting



225 15



225 18

Safety isolating switches with visible breaking of load and positive action of the contacts
Double breaking of the phases by self-cleaning snap open/close action contacts
Label holders for identification of the circuits
Connection via cage terminals tightened by Allen key (except 63 A ; by PZ 2 screws)
Screw-fixing or on EN 50022 4 rail (only on rail for 63 A Vistop)

Two versions for mounting on faceplate:

- With left or right external side handle with seal to maintain the IP protection (up to IP 55), mounting accessories, self-adhesive drilling template, adjustable extension rod (30 to 170 mm)
- With direct or external front handle with Cat. No. 227 32 to be ordered separately

Possibility of attaching a 2-pole - 16 A auxiliary isolating switch Cat. No. 227 22, or one or two N/C + N/O auxiliary Cat. No. 227 04/07

Pack	Cat. No.		Black handle	
	Front handle	Side handle	63 A	No of 17.5 mm modules
1/10	225 12	225 16	3-pole	7
1/10	225 15	225 18	4-pole	7
			100 A	
1/10	225 20	225 25	3-pole	7.5
1/10	225 22	225 27	4-pole	9
			125 A	
1/10	225 34	225 44	3-pole	7.5
1/10	225 39	225 46	4-pole	9
			160 A	
1/10	225 51	225 54	3-pole	7.5
1/10	225 53	225 56	4-pole	9

Vistop™ accessories
for load break isolating switches Up to 160A

Pack	Cat. No.	Auxiliary contacts
		Set of 2 auxiliary switches for on/off signalling 5A/250V
1/100	227 04	Single pole auxiliary from 63A to 160A (1NO + 1NC)
1/100	227 07	Additional contact from 63A to 160A (2NO + 2NC)

		Door interlock facilities
		Extension shaft door interlock (1)
1/10	227 32	For 63/100/125A /160 Vistop

		Sealable terminal shields
50	227 98	Set of 2 separate, sealable terminal shields Clip on upstream and/or downstream of Vistop 100 to 160 A
1/50	227 22	2P 16A Contact (Switch module) for Vistop 100/125/160A

Some items sold separately
For pack quantity, please refer to numerical index pages
For trade price, please see your local HPM Legrand representative for the current price list

Vistop™ 63 to 160 A

isolating switch ⊔ rail mounting

Conform to standards NF C 63-130, NF EN 60947-3, IEC 60947-3, BS EN 60947-3, VDE 0660, NBN EN 60947-3,

CNOMO E03 - 15-611 R, Veritas approved

Version with red handle/yellow front plate conforms to standards NF C 79-130, VDE 0113, IEC 60204-I, EN 60204

Glass fibre reinforced insulating casing, self-extinguishing at 960° C (IEC NF EN 60695-2-1)

Handle can be padlocked in open position using 1-3 padlocks Ø 6 mm

Vistop™ 63 to 160 A - visible contact indication

Accept auxiliary contacts N/C + N/O (cat. No 227 04/07) 1 or 2 (side handle)

Front handle

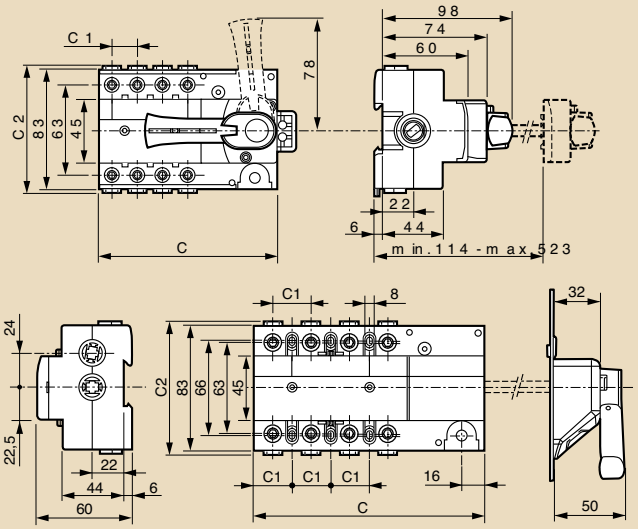

	Front handle			External side handle		
	63 A	100 A, 125 A, 160 A		63 A	100 A, 125 A, 160 A	
	3 and 4-pole	3P	4 P	3 and 4-pole	3 P	4 P
C	125	133	160	125	133	160
C_1	17.7	26.7		17.7	26.7	
C_2	90	91		90	91	

Electrical characteristics

Thermal rating (Ith)	63 A	100 A	125 A	160 A	switch 16 A (4)
Terminals	cage	cage	cage	cage	cage
Connection Cu(flexible)	4 to 35²		4 to 50 mm²		6²
Connection Cu (rigid)	4 to 50²		4 to 70 mm²		6²
Insulating voltage (Ui)	690 V∿	800 V∿	800 V∿	800 V∿	400 V∿
Impulse resistant voltage (U imp)	8 kV	8 kV	8 kV	8 kV	-
AC 22 A AC 23 A (1) 400 V	63 A (35 kW)	100 A (55 kW)	125 A (70 kW)	160 A (88 kW)	16 A
AC 22 A AC 23 A (1) 500 V	63 A (44 kW)	100 A (69 kW)	125 A (87 kW)	160 A (110 kW)	-
AC 22 A AC 23 A (1) 690 V	40 A (38 kW)	100 A (96 kW)	125 A (120 kW)	125 A (120 kW)	
DC 22 A/250 V (1) (2)*	63	125	125	16 A	
DC 23 A/250 V (1) (2)*	63	125	125	10 A	
Breaking capacity (Icu) (kA peak)	15	15	15	15	2
1 s resistant current (kA rms) (Icw)	2,5	3,5	3,5	3,5	1
Icc with fuses (kA rms)	100	100	100	80	100
Fuse rupture capacity	63 A	100 A (gG) 63 A (aM) (3)	125 A (gG) 125 A (aM) (3)	160 A (gG) 125 A (aM)	-
Short circuit capacity (kA prospective peak) (Icm)	7	12	12	12	1
Mechanical endurance (No of operations)	> 30 000	> 30 000	> 30 000	> 30 000	> 30 000
Index of Protection	IP 2x B (IP 3x C under frontplates)	IP 2x B (IP 3x C under frontplate) from 10 mm²			

(1) Test conditions accordance with IEC 60947-3
AC = alternating current. DC = direct current. A = for frequent switching
AC 22 A/DC 22 A : resistive motor breaking
AC 23 A/DC 23 A : inductive motor breaking

(2) N° of breaking contacts: 2

(3) 100 A (aM) with blade type cartridge fuses

(4) Values correspond to the device mounted on Vistop 100 - 125 - 160 A

DPX™-IS 250 isolating switches
160 to 250 A



266 07



266 17



262 39

Isolating switches for on-load circuit breaking by visible isolation and positive action of the contacts
Padlock integrated in the handle
Connection with cage terminals
Supplied with terminal shields
Conform to IEC 60947-3
Category of use AC 23 A
Accept the same electrical auxiliaries as the DPX (p. 20)

DPX-IS without release

Pack	Cat. No. 3P	Cat. No. 4P	
			Front handle
1	266 02		160 A
1	266 03	266 07	250 A
			Right-hand side handle
1	266 12		160 A
1	266 13	266 17	250 A
			Left-hand side handle
1	266 22		160 A
1	266 23	266 27	250 A

Mounting on rail

Pack	Cat. No.	
		Rail 4 fixing plate
1	262 39	For mounting DPX-IS 250

Rotary handles

Pack	Cat. No.	
		Vari-depth handle IP 55
		Comprising: connecting rod, bracket, self-adhesive drilling template, fixing accessories (seal to maintain the IP protection up to IP 55, door lock mechanism)
1	266 86	For front and side handle device

Accessories

Pack	Cat. No.	
		Cage terminals
1	262 88 (1)	Set of 4 For cable 185 mm² (rigid) or 150 mm² (flexible) for DPX 250 ER and DPX-IS 250
		Spreaders
1	273 22	Set of upstream and downstream spreaders
		Rear terminals
		Used to convert the fixed version with front terminals to the fixed version with rear terminals
	3P / 4P	
1	265 10 / 265 11	Set of upstream and downstream terminals
		Terminal shields
1	262 87	Set of 2
1	262 99	Rail height spacer fits on Din Rail used to mount on the same row DX and DPX/DPX-IS

(1) Can not be mounted on side by side mounted earth leakage modules 160 A

Some items sold separately
For pack quantity, please refer to numerical index pages
For trade price, please see your local HPM Legrand representative for the current price list

DPX™-IS 250 isolating switches

■ Electrical characteristics

Rating		160 A	250 A
Connection	Cu flexible	150 mm²	
	Cu rigid / Alu	185 mm²	
Copper bar		Width max. 28 mm	
Nominal rating (Ue)		690 V~ - 250 V⎓	
Rated insulation voltage (Ui)		800 V~	
Rated impulse withstand voltage (Uimp)		8 kV~	
AC 23 A	400 V~	160 A	250 A
	690 V~	160 A	160 A
AC 22 A	690 V~	160 A	250 A
Short-circuit making capacity (kA efficient) (Icm)		40 kA	
I admissible Is (Icw)		12 kA efficient	
I admissible with fuse (Icc)		100 kA efficient	
Max. rating of fuse gG	160 A	250 A	
	aM	160 A	160 A
Rated closing capacity on short circuit (kA peak) (Icm)		40 kA	
Endurance	mechanical	25000 operations	
	electrical (AC 23 - 400 V~)	2500 operations	
Index of protection		IP 20 front panel	

■ Dimensions

Front handle

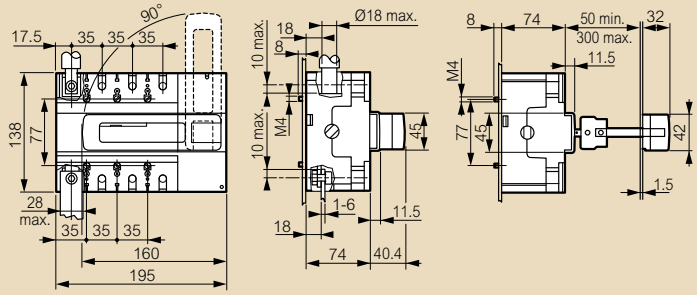

Right lateral handle

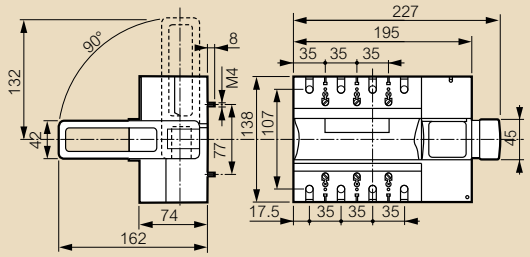

Left lateral handle

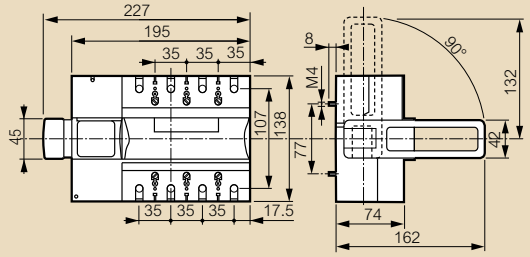

Mounted on rail Din

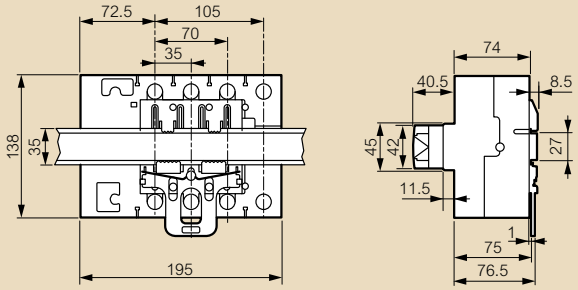

With terminal shields

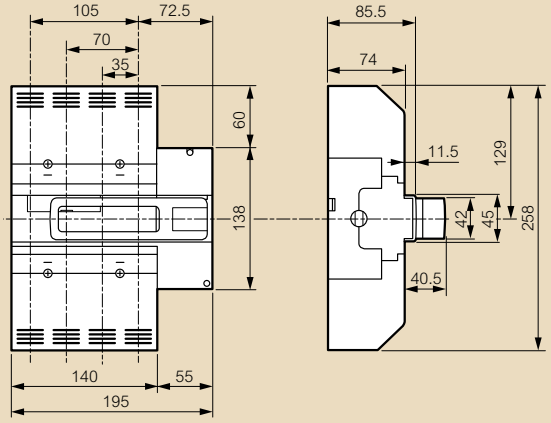

■ Mounting

Mounted on rail with plate

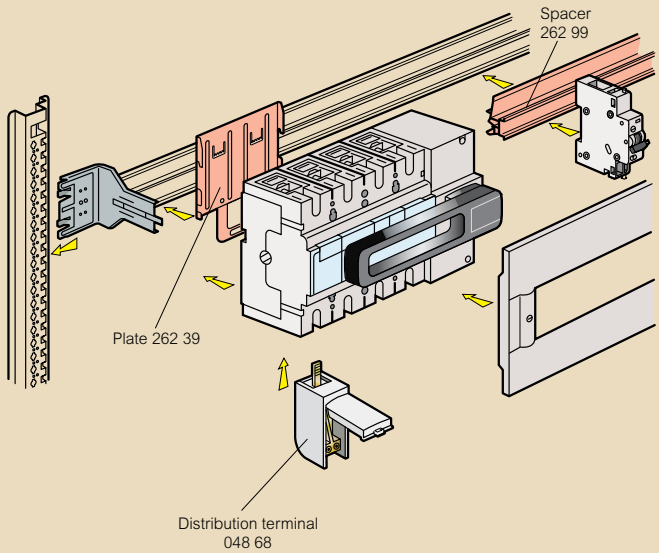

DPX™-IS 630 isolating switches
400 to 630 A



266 62



266 70



262 50

Isolating switches for on-load circuit breaking by visible isolation and positive action of the contacts
Padlock integrated in the handle
Supplied with terminal shields, and cage terminals
Conform to IEC 60947-3
Category of use AC 23 A
Accept the same electrical auxiliaries as the DPX (p. 20)

DPX-IS without release

Pack	Cat. No. 3P	Cat. No. 4P	
			Front handle
1	266 60	266 62	400 A
1	266 61	266 63	630 A
			Right-hand side handle
1	266 64	266 66	400 A
1	266 65	266 67	630 A
			Left-hand side handle
1	266 68	266 70	400 A
1	266 69	266 71	630 A

Rotary handles

Pack	Cat. No.	
		Comprising: connecting rod, bracket, self-adhesive drilling template, fixing accessories (seal to maintain the IP protection up to IP 55, door lock mechanism)
1	266 86	For front and side handle device

Accessories

Pack	Cat. No. 3P	Cat. No. 4P	
			Cage terminals
1	262 50		Set of 4 terminals for cable 300 mm² max.(rigid) or 240 mm² max.(flexible)
			Spreaders
1	262 48	262 49	Set of incoming or outgoing spreaders
			Rear terminals
			Used to convert the fixed version with front terminals to the fixed version with rear
1	263 50	263 51	Set of incoming and outgoing swivel rear terminals
1	263 52	263 53	Set of incoming and outgoing flat rear terminals
			Sealable terminal shields
1	262 45		Set of 2
			Padlock
			For locking mechanism in open position
1	266 97		Ronis

Technical characteristics

Rating		400 A	630 A
Terminals		cage	
Connection	Cu flexible	1 x 240 or 2 x 185 mm²	
	Cu rigid	1 x 240 or 2 x 185 mm²	
Copper bar		Width max 32 mm	
Nominal Rating (Ue)		690 V ac	
Rated insulation voltage (Ui)		800 V ac	
Rated impulse withstand voltage (Uimp)		8 kV ac	
AC 23 A	400 V ac	400 A	630 A
	500 V ac	400 A	630 A
	690 V ac	400 A	400 A
AC 22 A	690 V ac	400 A	630 A
I admissible Is (Icw)		20 kA RMS	
I admissible with fuse (kA efficient) (Icc)		100 kA	
Max. rating of fuse gG		400 A	630 A
Max. rating of fuse aM		400 A	630 A
Short-circuit making capacity (kA efficient) (Icm)		40 kA	
Mechanical endurance		15 000 operations	
Electrical endurance (AC 23 400 V ac)		1 500 operations	
Index of protection		IP 20 front panel	

Dimensions

Front handle

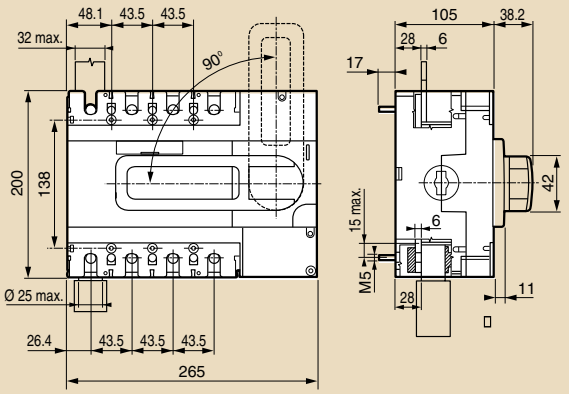

Right lateral handle

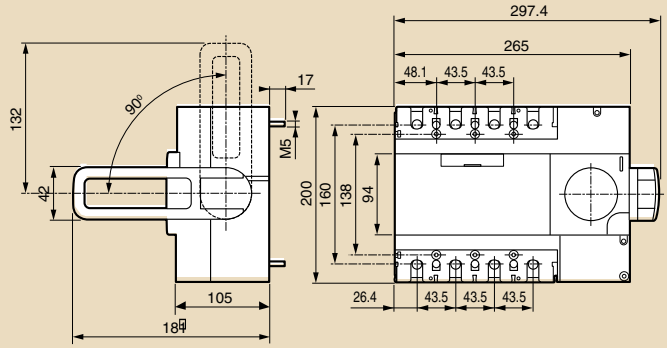

Left lateral handle

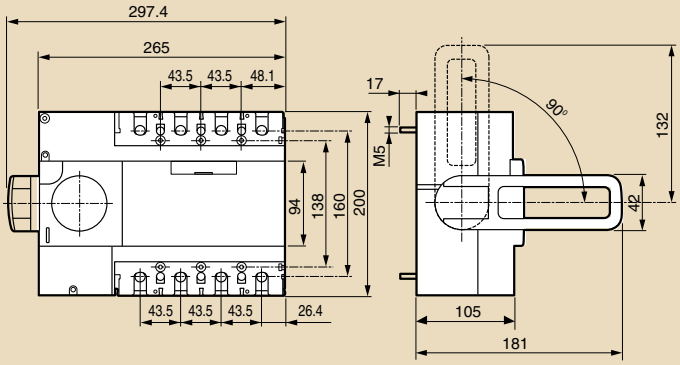

Front handle with terminal shields

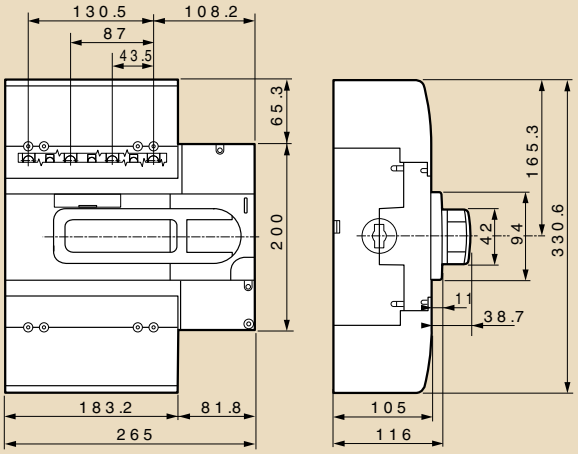

DPX-IS 1 600 isolating switches
800 to 1 600 A
accessories


265 98


262 65

Isolating switches for on-load circuit breaking by visible isolation and positive action of the contacts
Connection with cage terminals
Padlock integrated in the handle
Supplied with terminal shields
Conform to IEC 60947-3
Category of use AC 23 A

Pack	Cat. No.		DPX-IS with release
			Supplied without shunt release Can be associated with a residual current relay with separate coil
	3 P	4 P	**Front handle**
1	265 91		800 A
1	265 92		1 000 A
1	265 93	265 97	1 250 A
1	265 94	265 98	1 600 A

			Mounting accessories
	3 P	4 P	**Sealable terminal shields**
1	262 64	262 65	Set of 2 short terminal shields
			Insulation shields
			Used to isolate the connections between each pole
1	262 66		Set of 3 insulation shields

			Connection accessories
			Cage terminals
1	262 69		Set of 1 terminal for cables 2 x 240 mm² max. (rigid) or 2 x 185 mm² max. (flexible)
1	262 70		Set of terminal for cables 4 x 240 mm² max. (rigid) or 4 x 185 mm² max. (flexible)
			Spreaders
			For increasing the distance between each
	3 P	4 P	pole to be connected
1	262 73	262 74	Set of upstream or downstream spreaders
			Rear terminals
			Set of 6 (or 8) rear terminals, upstream or downstream
1	263 80	263 82	Short terminals
1	263 81		Long terminals
			Extended front terminals
1	262 67		Short terminals
1	262 68		Long terminals

Common auxiliaries to DPX (p. 20)

DPX-IS 1 600 isolating switches

■ Electrical characteristics

Rating		800 A	1 000 A	1 250 A	1 600 A
Connection	Cu flexible	2 x 185 mm² or 4 x 185 mm²			
	Cu rigide	2 x 240 mm² or 4 x 240 mm²			
	Alu	2 x 240 mm² or 4 x 240 mm²			
Copper bar		50 mm or 80 mm			
Nominal rating (Ue)		690 V±			
Rated insulation voltage (Ui)		690 V±			
Rated impulse withstand voltage (Uimp)		8 kV±			
AC 23 A	400 V±	800 A	1 000 A	1 250 A	1 600 A
	500 V±	800 A	1 000 A	1 250 A	1 600 A
	690 V±	800 A	1 000 A	1 250 A	1 600 A
DC 23 A	250 V±	800 A	1 000 A	1 250 A	1 600 A
I admissible is for 1s (Icw)		20 kA RMS			
I admissible with fuse (Icc)		100 kA RMS			
Max. rating of fuse		800 A	1 000 A	1 250 A	1 600 A
Short-circuit making capacity (kA peak) (Icm)		40 kA			
Mechanical endurance		10 000			
Electrical endurance (AC 23 A - 400 V~)		3 000	3 000	2 000	2 000
Index of protection		IP 20 front panel			

■ Dimensions

Front handle with terminal shields

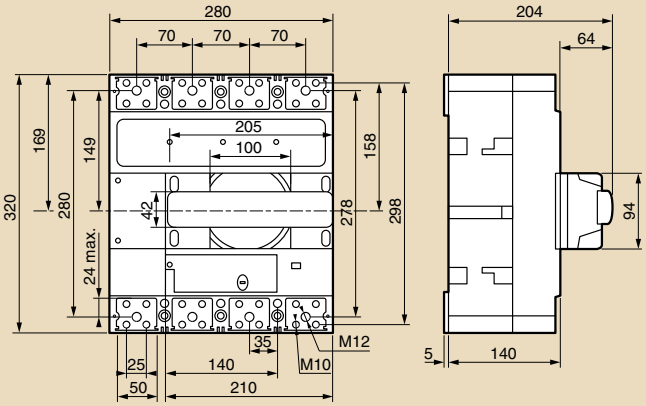

Terminal shields

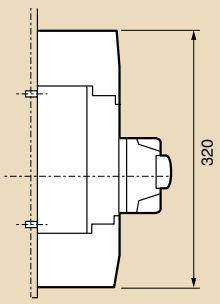

Some items sold separately
For pack quantity, please refer to numerical index pages
For trade price, please see your local HPM Legrand representative for the current price list