

Current transformers

Measurement devices

from 5 to 5000 A



Three-phase CT

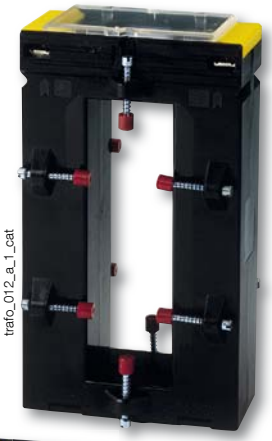

Bar-through CT

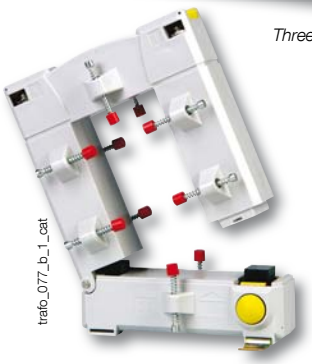

Split-core transformer



Cable-through CT

The solution for

- Industry
- Office buildings



Strong points

- An adapted accuracy class
- A wide range of ratings and dimensions
- Quick and easy to mount

Conformity to standards

- IEC 61869-2
- IEC 61439-1

Available on request

SOCOMEC also offer customised solutions:

- 1 A secondary
- Double or triple primary ratio
- Voltage transformer
- Summation CTs

Function

SOCOMEC current transformers deliver to the secondary a standard current proportional to the primary current and adapted to the rating of the associated device. They are equipped as standard with removable terminal covers and double terminals allowing the secondary to be short-circuited without any risk.

They are mounted using two screw-on metal brackets or, in certain cases, by a clip-on DIN-rail fastener. The connections are made by screws or by fast-on terminals.

- Accuracy class: 0.2s — 0.5 or 1.
- Dielectric quality: 3 kV — 50 Hz — 1 min.
- Operating frequency: 50 — 60 Hz.
- Permanent overload: 1.2 In.
- Insulation class: E (120 °C).

Advantages

An adapted accuracy class

In order to get the best of your DIRIS multifunction meters and COUNTIS energy meters, we can provide current transformers with the following accuracy classes: 0.2s; 0.5; 1 or 3.

A wide range of ratings and dimensions

Your measurement process can be optimised whatever your needs in terms of ratings, space requirements, conductor sizing or accuracy class. A wide range of combinations are available in our standard range with specific versions available on request (other ratios, tropicalisation and specific frequency, class or burden).

Quick and easy to mount

Our current transformers are adapted to any type of mounting: edgewise or flat mounting, DIN-rail or back-plate mounting. Implementation is easy and rapid.

Composition of the range

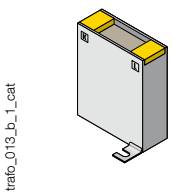

Primary wound moulded case CT

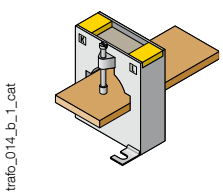

Bar or cable-through CT

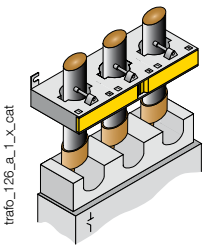

Bar or cable-through three-phase CT

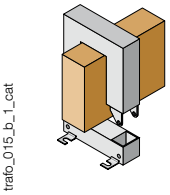

Bar-through split-core CT

socomec Innovative Power Solutions

Primary wound moulded case CT

References

Primary	Secondary(1)	TRB 60 Class 0.5	TRB 60 Reference	TRB 70 Class 0.5	TRB 70 Reference	T2RB 115 Class 0.2s	T2RB 115 Reference	TRB 135 Class 0.5	TRB 135 Reference
5 A	5 A	2.5 VA	192 **x 0505**	10 VA	192T **0521**				
10 A	5 A	2.5 VA	192T **0510**	10 VA	192T **0522**				
15 A	5 A	2.5 VA	192T **0515**	10 VA	192T **0523**				
20 A	5 A	2.5 VA	192T **0520**	10 VA	192T **0524**				
25 A	5 A			10 VA	192T **0525**	7.5 VA	192U **0402**	10 VA	192T **0603**
30 A	5 A			5 VA	192T **0530**	7.5 VA	192U **0403**	10 VA	192T **0607**
40 A	5 A			5 VA	192T **0541**	7.5 VA	192U **0404**	10 VA	192T **0604**
50 A	5 A			5 VA	192T **0551**	7.5 VA	192U **0405**	10 VA	192T **0605**
60 A	5 A					7.5 VA	192U **0406**	10 VA	192T **0606**
75 A	5 A					7.5 VA	192U **0407**	10 VA	192T **0608**
80 A	5 A					7.5 VA	192U **0408**	10 VA	192T **0609**
100 A	5 A							10 VA	192T **0610**
125 A	5 A					7.5 VA	192U **0412**	10 VA	192T **0612**
150 A	5 A					7.5 VA	192U **0415**	10 VA	192T **0615**

(1) Secondary 1 A: on request.

Accessories

Description of accessories	TRB 60 Reference	TRB 70 Reference		TRB 135 Reference
DIN-rail mounting	192T **0003**	192T **0005** (1)		
Sealable cover	192T **0105**	192T **0103**		192T **0101** (2)

(1) Not available for 50 A rating
(2) For 125 and 150 A ratings, use reference 192T 0103.

CT Plug-in transducer (CEA-VA)

Power supply	Output	TRB 60 Reference	TRB 70 Reference
Self-supplied	0-20 mA / 0-10 VDC	192Y **0015**	192Y **0025** (1)
230 VAC	0-20 mA / 0-10 VDC	192Y **0215**	192Y **0225** (1)
24 VDC	0-20 mA / 0-10 VDC	192Y **0115**	192Y **0125** (1)

(1) Not available for ratings 40 and 50 A

CT Plug-in transducer (CEA-VA4)

Power supply	Output	TRB 60 Reference	TRB 70 Reference
230 VAC	4-20 mA / 0-10 VDC	192T **0255**	192Y **0265** (1)
24 VDC	4-20 mA / 0-10 VDC	192Y **0155**	192Y **0165** (1)

(1) Not available for ratings 40 and 50 A

Certificate of performance

Each class 0.2s current transformer is supplied with an individual certificate of performance, attesting to its accuracy.

Primary wound moulded case CT (continued)

Dimensions

TRB 60

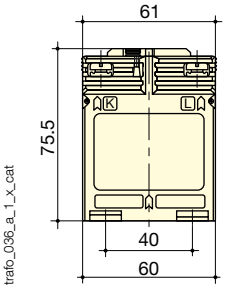

TRB 70(1)

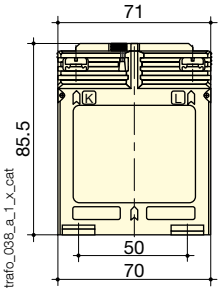

(1) different dimensions for 40 and 50 A ratings

TRB 70 (for 40 and 50 A)

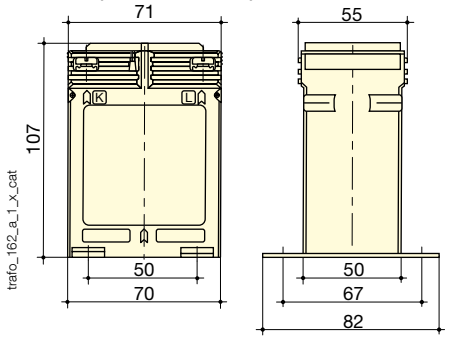

T2RB115

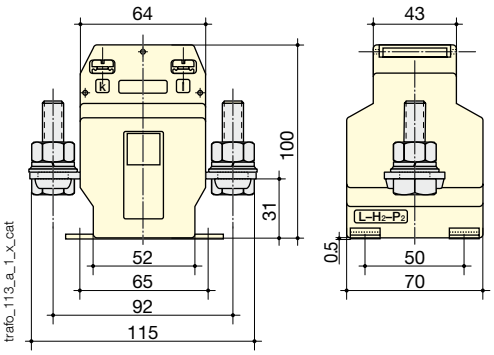

TRB 135

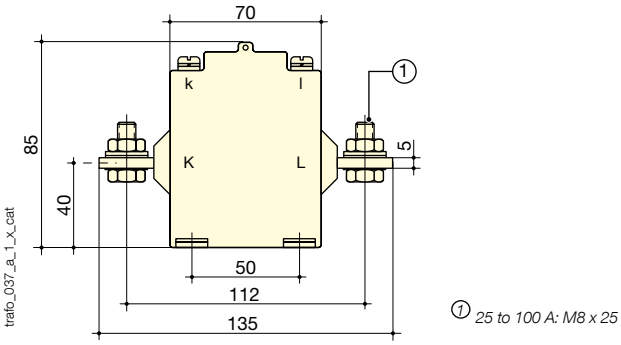

① 25 to 100 A: M8 x 25

TRB 135 (for 125 and 150 A)

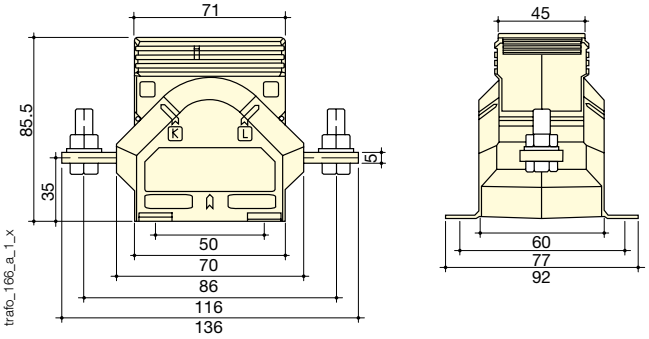

Primary wound CT	TRB 60	TRB 70 (1)	T2RB 115	TRB 135 (2)
H x W x D (mm)	75.5 x 61 x 35	85.5 x 71 x 45	115 x 100 x 70	85 x 135 x 60
DIN-rail mounting	yes	yes	no	no

(1) Dimensions are different for TRB 70 with 40 and 50 A ratings.
(2) Dimensions are different for TRB 135 with 125 and 150 A ratings.

Associated transducers



Transducer to be associated with adapted current transformers:

- Class 0.5.
- Input: 1 or 5 A.
- Output:
  - 0-20 mA, 0-10 V (type CEA-VA)
  - 4-20 mA, 0-10 V (type CEA-VA4)
- Self-supplied or auxiliary power supply 24 VDC or 230 VAC.
- 3 sizes according to the CT: type 1, 2 or 3.

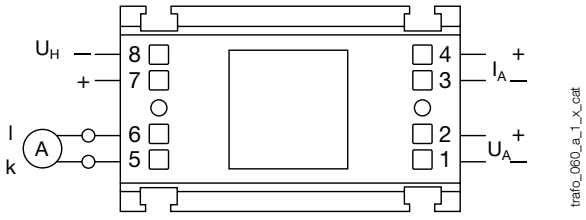

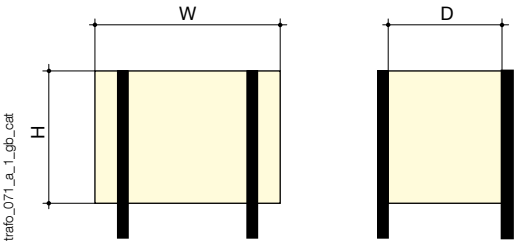

Dimensions (mm)

Converter	For CT	Height (mm)	Width (mm)	Depth (mm)
Type 1	TRB 60	50.5	60	32.5
Type 2	TRB 70	50	70	43

Cable-through CT

References

		TCA 14		TCA 21			TCA 22		T2CA 225	
Primary	Secondary(1)	Class 1	Reference	Class 1	Class 0.5	Reference	Class 1	Reference	Class 0.2s	Reference
40 A	5 A	1	192T **1404**							
50 A	5 A	1	192T **1405**							
60 A	5 A	1.5	192T **1406**	1 VA		192T **2006**				
75 A	5 A	1.5	192T **1407**	1.5 VA		192T **2007**				
80 A	5 A			1.5 VA		192T **2008**				
100 A	5 A	2.5	192T **1410**		1.5 VA	192T **2010**	1 VA	192T **2022**		
125 A	5 A	2.5	192T **1412**		1.5 VA	192T **2012**				
150 A	5 A	2.5	192T **1415**		1.5 VA	192T **2015**	1.5 VA	192T **2023**	1.5 VA	192U **2215**
200 A	5 A				2.5 VA	192T **2020**	2.5 VA	192T **2024**	2.5 VA	192U **2220**
250 A	5 A				2.5 VA	192T **2016**	3.75 VA	192T **2025**	5 VA	192U **2225**
300 A	5 A				2.5 VA	192T **2017**	3.75 VA	192T **2030**	5 VA	192U **2230**
400 A	5 A						5 VA	192T **2034**	5 VA	192U **2240**
500 A	5 A						5 VA	192T **2035 (2)**	10 VA	192U **2250**
600 A	5 A						5 VA	192T **2036 (2)**	10 VA	192U **2260**

(1) Secondary 1 A: on request. *(2) Dimensions of T2CA 225*

Accessories

Description of accessories	TCA 14 Reference	TCA 21 Reference	TCA 22 Reference	T2CA 225 Reference
DIN-rail mounting	192T **0006**	192T **0006**	192T **0007**	192T **0003**
Guide tube Ø 8.5 mm (1)		192T **0020**		
Guide tube Ø 12.5 mm(1)		192T **0021**	192T **0023**	
Guide tube Ø 16.5 mm(1)			192T **0024**	
Sealable cover				192T **0105**

(1) For centralising cables within the CT aperture.

Dimensions

TCA 14

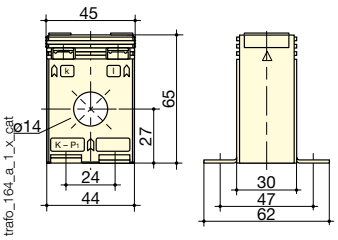

TCA 21

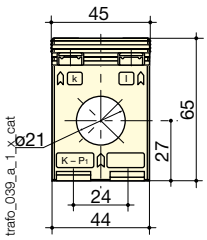

TCA 22

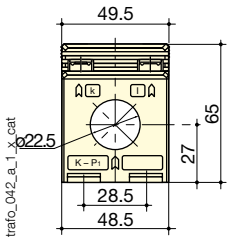

T2CA 225

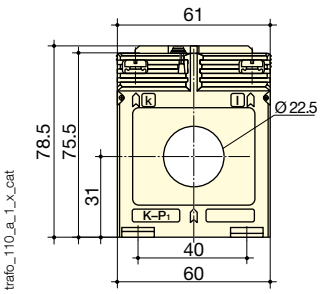

Cable-through CT	TCA 14	TCA 21	TCA 22(1)	T2CA 225
Ø cable (mm)	14	21	22.5	22.5
H x W x D (mm)	65 x 45 x 30	65 x 45 x 30	65 x 49.5 x 35	78.5 x 61 x 35
DIN-rail mounting	yes	yes	yes	yes

(1) Dimensions are different for 600 A: 78.5x61x35.

Current transformers

Measurement devices

from 5 to 5000 A

Bar or cable-through CT

References

		TCB 17-20		TCB 26-30			T2CB 26-30		TCB 28-30		
Primary	Secondary[1]	Class 1	Reference	Class 0.5	Class 1	Reference	Class 0.2s	Reference	Class 0.5	Class 1	Reference
50 A	5 A				1 VA	192T **2305**					
60 A	5 A	1 VA	192T **2106**		1 VA	192T **2306**					
75 A	5 A	1 VA	192T **2107**		1.5 VA	192T **2307**					
80 A	5 A	1.25 VA	192T **2108**		1.5 VA	192T **2308**				1.25 VA	192T **2408**
100 A	5 A	1.5 VA	192T **2110**	1.5 VA		192T **2310**				1.5 VA	192T **2410**
125 A	5 A	1.5 VA	192T **2112**	1.5 VA		192T **2312**				2.5 VA	192T **2412**
150 A	5 A	2.5 VA	192T **2115**	1.5 VA		192T **2315**	1.5 VA	192U **2315**		2.5 VA	192T **2415**
160 A	5 A	2.5 VA	192T **2116**								
200 A	5 A	2.5 VA	192T **2120**	2.5 VA		192T **2320**	2.5 VA	192U **2320**	2.5 VA		192T **2420**
250 A	5 A	5 VA	192T **2125**	5 VA		192T **2325**	2.5 VA	192U **2325**	2.5 VA		192T **2425**
300 A	5 A	5 VA	192T **2130**	5 VA		192T **2330**	5 VA	192U **2330**	2.5 VA		192T **2430**
400 A	5 A	5 VA	192T **2140**	5 VA		192T **2340**	5 VA	192U **2340**	5 VA		192T **2440**
500 A	5 A			5 VA		192T **2350**	5 VA	192U **2350**	5 VA		192T **2450**
600 A	5 A			5 VA		192T **2360**	5 VA	192U **2360**			
750 A	5 A			5 VA		192T **2375**	5 VA	192U **2375**			

(1) Secondary 1 A: on request.

		TCB 26-40		TCB 32-40			T2CB 32-40	
Primary	Secondary[1]	Class 1	Reference	Class 0.5	Class 1	Reference	Class 0.2s	Reference
75 A	5 A				1.5 VA	192T **4007**		
100 A	5 A	1.5 VA	192T **3210**	1.5 VA		192T **4010**		
125 A	5 A	2.5 VA	192T **3212**	1.5 VA		192T **4012**		
150 A	5 A	2.5 VA	192T **3215**	2.5 VA		192T **4015**		
160 A	5 A	2.5 VA	192T **3216**					
200 A	5 A	2.5 VA	192T **3220**	5 VA		192T **4020**	2.5 VA	192U **4020**
250 A	5 A	2.5 VA	192T **3225**	5 VA		192T **4025**	5 VA	192U **4025**
300 A	5 A	5 VA	192T **3230**	10 VA		192T **4030**	5 VA	192U **4030**
400 A	5 A	5 VA	192T **3240**	10 VA		192T **4040**	5 VA	192U **4040**
500 A	5 A	5 VA	192T **3250**	10 VA		192T **4050**	5 VA	192U **4050**
600 A	5 A	5 VA	192T **3260**	10 VA		192T **4060**	5 VA	192U **4060**
750 A	5 A	10 VA	192T **3275**	10 VA		192T **4075**	5 VA	192U **4075**
800 A	5 A			10 VA		192T **4080**		
1000 A	5 A			10 VA		192T **4090**		

(1) Secondary 1 A: on request.

Accessories

Description of accessories	TCB 17-20 Reference	TCB 26-30 Reference	TCB 26-40 Reference	TCB 32-40 Reference
DIN-rail mounting	192T **0007**	192T **0003**	192T **0003**	192T **0005**
Sealable cover		192T **0105**	192T **0105**	192T **0103**

CT Plug-in transducer (CEA-VA)

Power supply	Output	TCB 26-30 Reference	TCB 26-40 Reference	TCB 32-40 Reference
Self-supplied	0-20 mA / 0-10 VDC	192Y **0015**	192Y **0015**	192Y **0035**
230 VAC	0-20 mA / 0-10 VDC	192Y **0215**	192Y **0215**	192Y **0235**
24 VDC	0-20 mA / 0-10 VDC	192Y **0115**	192Y **0115**	192Y **0135**

CT Plug-in transducer (CEA-VA4)

Power supply	Output	TCB 26-30 Reference	TCB 26-40 Reference	TCB 32-40 Reference
230 VAC	4-20 mA / 0-10 VDC	192T **0255**	192T **0255**	192Y **0275**
24 VDC	4-20 mA / 0-10 VDC	192Y **0155**	192Y **0155**	192Y **0175**

socomec Innovative Power Solutions

References

Primary	Secondary[1]	TCB 44-50 Class 0.5	TCB 44-50 Reference	TCB 44-63 Class 0.5	TCB 44-63 Reference	T2CB 44-63 Class 0.2s	T2CB 44-63 Reference
150 A	5 A	1.5 VA	192T **5015**				
200 A	5 A	2.5 VA	192T **5020**	1.5 VA	192T **6420**		
250 A	5 A	5 VA	192T **5025**	1.5 VA	192T **6425**		
300 A	5 A	5 VA	192T **5030**	2.5 VA	192T **6430**	5 VA	192U **6430**
400 A	5 A	10 VA	192T **5040**	5 VA	192T **6440**	5 VA	192U **6440**
500 A	5 A	10 VA	192T **5050**	10 VA	192T **6450**	10 VA	192U **6450**
600 A	5 A	10 VA	192T **5060**	10 VA	192T **6460**	10 VA	192U **6460**
750 A	5 A	10 VA	192T **5075**	10 VA	192T **6475**	10 VA	192U **6475**
800 A	5 A	15 VA	192T **5080**	10 VA	192T **6480**		
1000 A	5 A	15 VA	192T **5090**	15 VA	192T **6490**	10 VA	192U **6490**
1200 A	5 A	15 VA	192T **5092**	15 VA	192T **6492**	10 VA	192U **6492**
1250 A	5 A	15 VA	192T **5095**	15 VA	192T **6493**	10 VA	192U **6493**
1500 A	5 A			15 VA	192T **6495**	10 VA	192U **6495**
1600 A	5 A			15 VA	192T **6494**		

(1) Secondary 1 A: on request.

Primary	Secondary[1]	TCB 55-80 Class 0.5	TCB 55-80 Reference	TCB 85-100 Class 0.5	TCB 85-100 Reference	TCB 100-125 Class 0.5	TCB 100-125 Reference
400 A	5 A	2.5 VA	192T **8140**				
500 A	5 A	5 VA	192T **8150**				
600 A	5 A	5 VA	192T **8160**				
750 A	5 A	10 VA	192T **8175**	2.5 VA	192T **9675**		
800 A	5 A	10 VA	192T **8180**	5 VA	192T **9680**		
1000 A	5 A	15 VA	192T **8190**	10 VA	192T **9690**	5 VA	192T **9590**
1200 A	5 A	15 VA	192T **8192**	10 VA	192T **9692**	10 VA	192T **9592**
1250 A	5 A	15 VA	192T **8193**	15 VA	192T **9693**	10 VA	192T **9593**
1500 A	5 A	15 VA	192T **8195**	15 VA	192T **9695**	15 VA	192T **9595**
1600 A	5 A	15 VA	192T **8194**	15 VA	192T **9694**		
2000 A	5 A	15 VA	192T **8196**	30 VA	192T **9696**	30 VA	192T **9596**
2500 A	5 A			30 VA	192T **9697**	30 VA	192T **9597**
3000 A	5 A			30 VA	192T **9698**	30 VA	192T **9598**

(1) Secondary 1 A: on request.

Accessories

Description of accessories	TCB 44-50 Reference	TCB 44-63 Reference	TCB 55-80 Reference	TCB 85-100 Reference	TCB 100-125 Reference
Sealable cover	192T **0102**	192T **0102**	192T **0102**	192T **0106**	192T **0106**

CT Plug-in transducer (CEA-VA)

Power supply	Output	TCB 44-50 Reference	TCB 44-63 Reference	TCB 55-80 Reference
Self-supplied	0-20 mA / 0-10 VDC		192Y **0045**	192Y **0045**
230 VAC	0-20 mA / 0-10 VDC		192Y **0245**	192Y **0245**
24 VDC	0-20 mA / 0-10 VDC		192Y **0145**	192Y **0145**

CT Plug-in transducer (CEA-VA4)

Input	Output	TCB 44-50 Reference	TCB 44-63 Reference	TCB 55-80 Reference
230 VAC	4-20 mA / 0-10 VDC		192Y **0285**	192Y **0285**
24 VDC	4-20 mA / 0-10 VDC		192Y **0185**	192Y **0185**

Bar or cable-through CT (continued)

Dimensions

TCB 17-20

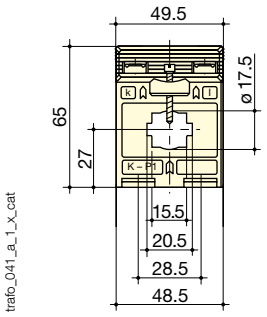

TCB 26-30 and T2CB 26-30

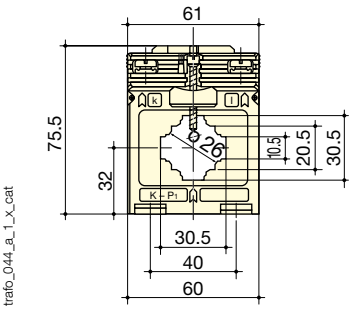

TCB 28-30

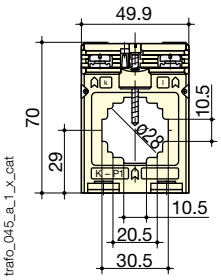

TCB 26-40

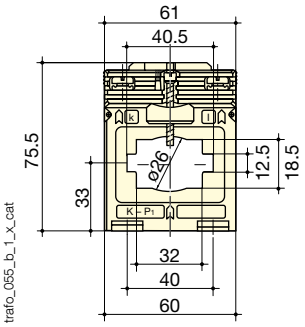

TCB 32-40 and T2CB 32-40

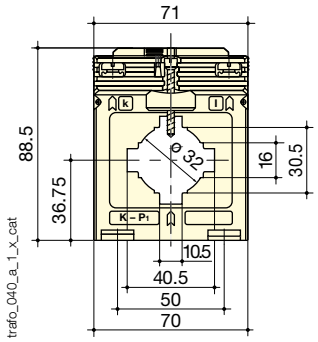

TCB 44-50

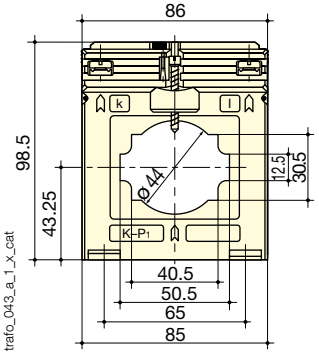

TCB 44-63 and T2CB 44-63

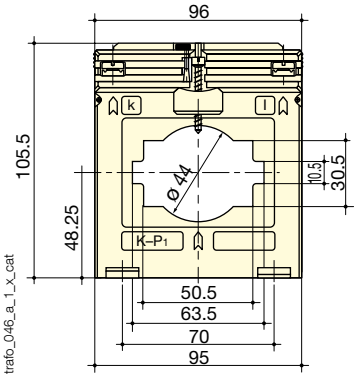

TCB 55-80

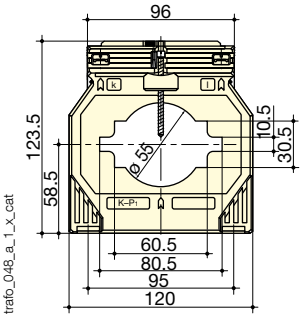

TCB 85-100

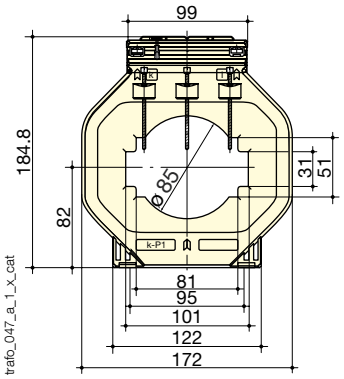

TCB 100-125

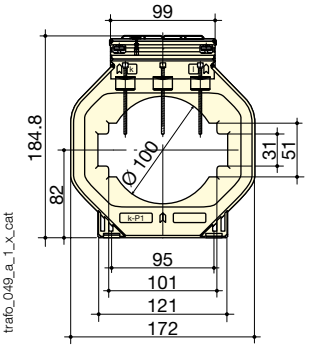

Bar or cable-through CT	TCB 17-20	TCB 26-30	T2CB 26-30	TCB 26-40	TCB 28-30	TCB 32-40	T2CB 32-40
Bar (mm)	20 x 5 (x 1)	30 x 10 (x 1) / 20 x 10 (x 1…2)	30 x 10 (x 1) / 20 x 10 (x 1…2)	40 x 12 (x 1) / 32 x 18 (x 1)	30 x 10 (x 1)	40 x 10 (x 1) / 30 x 5 (x 1…2)	40 x 10 (x 1) / 30 x 5 (x 1…2)
Ø cable (mm)	17.5	26	26	26	28	32	32
H x W x D (mm)	65 x 49.5 x 50	75.5 x 61 x 48	75.5 x 61 x 48	75.5 x 61 x 48	70 x 49.9 x 68	88.5 x 71 x 58	88.5 x 71 x 58
DIN-rail mounting	yes	yes	yes	yes		yes	yes

Bar or cable-through CT	TCB 44-50	TCB 44-63	T2CB 44-63	TCB 55-80	TCB 85-100	TCB 100-125
Bar (mm)	50 x 12 (x 1)/ 40 x 10 (x 1…2)	63 x 10 (x 1)/ 50 x 10 (x 1…2)	63 x 10 (x 1)/ 50 x 10 (x 1…2)	80 x 10 (x 1)/ 60 x 30 (x 1) / 60 x 10 (x 1…2)	100 x 10 (x 1…2) / 80 x 10 (x 1…3)	123 x 30 (x 1)/ 100 x 10 (x 1…3)
Ø cable (mm)	44	44	44	55	85	100
H x W x D (mm)	98.5 x 86 x 58	105.5 x 96 x 58	105.5 x 96 x 58	123.5 x 120 x 58	184.5 x 172 x 52	184.5 x 172 x 52

Associated transducers





Transducer to be associated with adapted current transformers:

- *Class 0.5.*
- *Input: 1 or 5 A*
- *Output:*
  - *0-20 mA, 0-10 V (model CEA-VA),*
  - *4-20 mA, 0-10 V (model CEA-VA4),*
- *Self-supplied or auxiliary power supply 24 VDC or 230 VAC.*
- *3 sizes according to the CT: type 1, 2 or 3.*

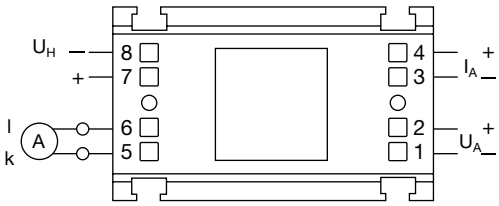

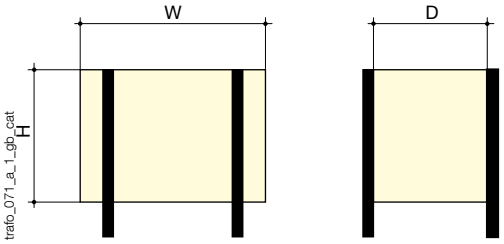

Dimensions (mm)

Converter	For CT	Height (mm)	Width (mm)	Depth (mm)
Type 1	TCB 26-30	50.5	60	32.5
Type 1	TCB 26-40	50.5	60	32.5
Type 2	TCB 32-40	50	70	43
Type 3	TCB 44-63	50.5	95	43
Type 3	TCB 55-80	50.5	95	43

Current transformers

Measurement devices

from 5 to 5000 A

Bar-through CT

References

		TBA 60			TBA 80		TBA 100		T2BA 100	
Primary	Secondary	Class 0.5	Class 1	Reference	Class 0.5	Reference	Class 0.5	Reference	Class 0.2s	Reference
200 A	5 A		2.5 VA	192T **7020**						
250 A	5 A	2.5 VA		192T **7025**						
300 A	5 A	2.5 VA		192T **7030**	2.5 VA	192T **7530**				
400 A	5 A	5 VA		192T **7040**	5 VA	192T **7540**				
500 A	5 A	5 VA		192T **7050**	5 VA	192T **7550**				
600 A	5 A	10 VA		192T **7060**	5 VA	192T **7560**	5 VA	192T **8060**		
750 A	5 A	10 VA		192T **7075**	5 VA	192T **7575**	5 VA	192T **8075**		
800 A	5 A	10 VA		192T **7080**	10 VA	192T **7580**	5 VA	192T **8080**		
1000 A	5 A	15 VA		192T **7090**	15 VA	192T **7590**	5 VA	192T **8090**		
1200 A	5 A	15 VA		192T **7092**	15 VA	192T **7592**	10 VA	192T **8092**	5 VA	192U **8092**
1250 A	5 A	15 VA		192T **7093**	15 VA	192T **7593**	10 VA	192T **8093**	5 VA	192U **8093**
1500 A	5 A	15 VA		192T **7095**	15 VA	192T **7595**	15 VA	192T **8095**	5 VA	192U **8095**
1600 A	5 A	15 VA		192T **7094**	15 VA	192T **7594**	15 VA	192T **8094**		
2000 A	5 A				15 VA	192T **7596**	15 VA	192T **8096**	5 VA	192U **8096**
2500 A	5 A						30 VA	192T **8097**	10 VA	192U **8097**
3000 A	5 A						30 VA	192T **8098** (1)	10 VA	192U **8098**
4000 A	5 A						30 VA	192T **8099** (1)		

(1) Dimensions are different for TBA 100 with 3000 and 4000 A primary.

		TBA 103		T2BA 103		TBA 127		T2BA 127	
Primary	Secondary	Class 0.5	Reference	Class 0.2s	Reference	Class 0.5	Reference	Class 0.2s	Reference
400 A	5 A	2.5 VA	192T **9340**			2.5 VA	192T **9740**		
500 A	5 A	2.5 VA	192T **9350**			2.5 VA	192T **9750**		
600 A	5 A	2.5 VA	192T **9360**			2.5 VA	192T **9760**		
750 A	5 A	2.5 VA	192T **9375**			2.5 VA	192T **9775**		
800 A	5 A	5 VA	192T **9380**			5 VA	192T **9780**		
1000 A	5 A	10 VA	192T **9390**	5 VA	192U **9390**	10 VA	192T **9790**		
1200 A	5 A	10 VA	192T **9392**	5 VA	192U **9392**	10 VA	192T **9792**	5 VA	192U **9792**
1250 A	5 A	10 VA	192T **9393**	5 VA	192U **9393**	10 VA	192T **9793**	5 VA	192U **9793**
1500 A	5 A	15 VA	192T **9395**	5 VA	192U **9395**	15 VA	192T **9795**	5 VA	192U **9795**
1600 A	5 A	10 VA	192T **9394**			15 VA	192T **9794**		
2000 A	5 A	15 VA	192T **9396**			15 VA	192T **9796**	5 VA	192U **9796**
2500 A	5 A					15 VA	192T **9797**		
3000 A	5 A					25 VA	182T **9798 (1)**		
4000 A	5 A					30 VA	182T **9799 (1)**		

(1) Replacement model TRA 127 for this rating.

Accessories

Description of accessories	TBA 60 Reference	TBA 80 Reference	TBA 100 Reference	T2BA 100 Reference	TBA 103 Reference	T2BA 103 Reference	TBA 127 Reference	T2BA 127 Reference
Sealable cover	192T **0102**		192T **0102**	192T **0102**			192T **0102**	192T **0102**

CT Plug-in transducer (CEA-VA)

Power supply	Output	TBA 100 Reference
Self-supplied	0-20 mA / 0-10 VDC	192Y **0045**
230 VAC	0-20 mA / 0-10 VDC	192Y **0245**
24 VDC	0-20 mA / 0-10 VDC	192Y **0145**

CT Plug-in transducer (CEA-VA4)

Power supply	Output	TBA 100 Reference
230 VAC	4-20 mA / 0-10 VDC	192Y **0285**
24 VDC	4-20 mA / 0-10 VDC	192Y **0185**

socomec Innovative Power Solutions

Dimensions

TBA 60

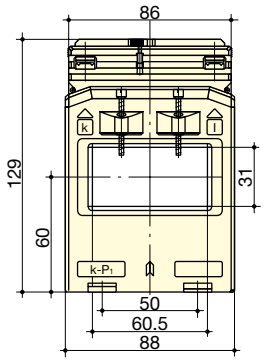

trafo_050_a_1_x_cat

TBA 80
300 to 2000 A

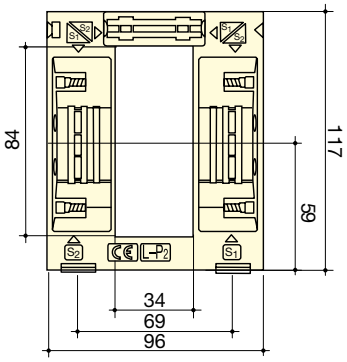

trafo_059_a_1_x_cat

TBA 100 600 to 2500 A[1]
T2BA 100 1200 to 3000 A

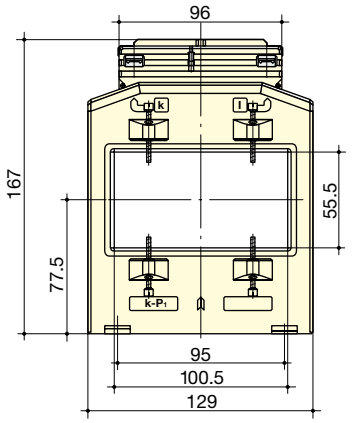

trafo_082_a_1_x_cat

(1) TBA 100, 3000 and 4000 A: 214 x 129 x 78 mm.

TBA 103 and T2BA 103

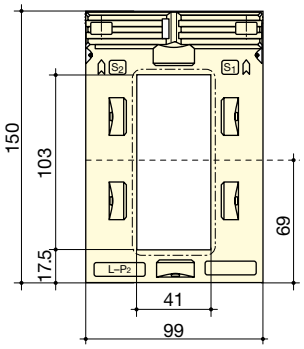

trafo_054_a_1_x_cat

TBA 127 and T2BA 127

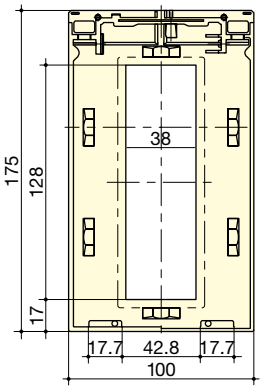

trafo_052_a_1_x_cat

Bar-through CT	TBA 60	TBA 80	TBA 100	T2BA 100	TBA 103	T2BA 103	TBA 127	T2BA 127
Bar (mm)	60 x 30	84 x 34	100 x 55	100 x 55	103 x 41	103 x 41	128 x 38	128 x 38
H x W x D (mm)	129 x 88 x 78	117 x 96 x 68	167 x 129 x 78 [1]	167 x 129 x 78	150 x 99 x 58	150 x 99 x 58	175 x 100 x 55	175 x 100 x 55

(1) TBA 100, 3000 and 4000 A: 214 x 129 x 78 mm.

Three-phase bar or cable-through CT

References

Primary	Secondary(1)	TCB3 18-20 Class 1	TCB3 18-20 Reference	TCB3 22-30 Class 1	TCB3 22-30 Reference
3 x 100 A	3 x 5 A	1 VA	192T **3310**		
3 x 150 A	3 x 5 A	1.25 VA	192T **3315**		
3 x 200 A	3 x 5 A	1.5 VA	192T **3320**		
3 x 250 A	3 x 5 A	2.5 VA	192T **3325**	2.5 VA	192T **3425**
3 x 300 A	3 x 5 A			3.75 VA	192T **3430**
3 x 400 A	3 x 5 A			5 VA	192T **3440**
3 x 500 A	3 x 5 A			5 VA	192T **3450**
3 x 600 A	3 x 5 A			5 VA	192T **3460**

(1) Secondary 1 A: on request.

Dimensions

TCB3 18-20

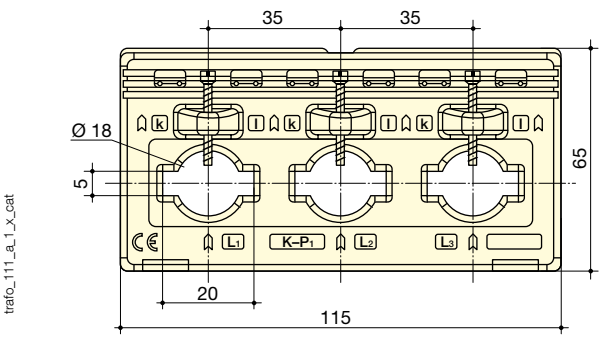

trafo_111_a_1_x_cat

TCB3 22-30

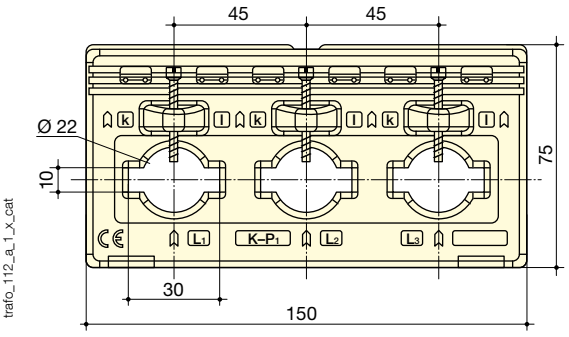

trafo_112_a_1_x_cat

Three-phase bar or cable-through CT	TCB3 18-20	TCB3 22-30
Ø cable (mm)	18	22
Bar-through	20 x 5	30 x 10
H x W x D (mm)	115 x 65 x 37	150 x 75 x 37
DIN-rail mounting	no	no

References

Primary	Secondary(1)	TCA 13 — 3P Class 1	Reference
3 x 50 A	5 A	1 VA	192T **1905**
3 x 60 A	5 A	1.25 VA	192T **1906**
3 x 75 A	5 A	1.5 VA	192T **1907**
3 x 80 A	5 A	1.5 VA	192T **1908**
3 x 100 A	5 A	2.5 VA	192T **1910**
3 x 125 A	5 A	2.5 VA	192T **1912**
3 x 150 A	5 A	2.5 VA	192T **1915**
3 x 160 A	5 A	2.5 VA	192T **1916**

(1) Secondary 1 A: on request.

Dimensions

TCA 13 — 3P

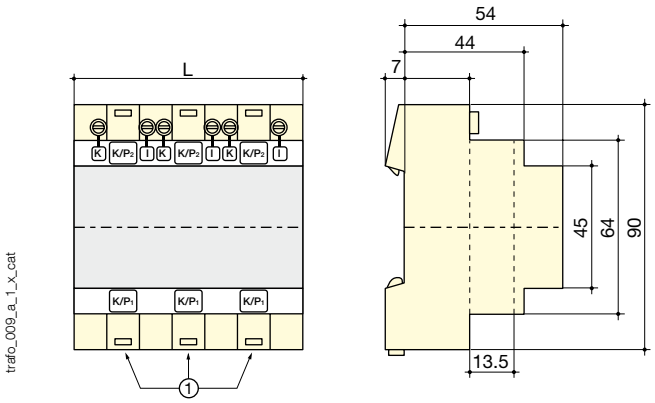

(1) Cable-through aperture Ø 13.5 mm.

Number of modules	Front degree of protection	Terminal degree of protection	L (mm)	Mounting
6	IP65	IP20	105	35 mm DIN-rail

Current transformers

Measurement devices

from 5 to 5000 A

Split-core CT

References

		TO 23			TO 58			TO 812			TO 816	
Primary	**Secondary**	**Class 1**	**Class 3**	**Reference**	**Class 0.5**	**Class 1**	**Reference**	**Class 0.5**	**Class 1**	**Reference**	**Class 0.5**	**Reference**
100 A	5 A		1.25 VA	192T **4601**								
150 A	5 A		1.5 VA	192T **4602**								
200 A	5 A		2.5 VA	192T **4603**								
250 A	5 A	1.5 VA		192T **4604**		1.5 VA	192T **4625**		1.5 VA	192T **4725**		
300 A	5 A	3.75 VA		192T **4605**		2.5 VA	192T **4630**		2.5 VA	192T **4730**		
400 A	5 A	5 VA		192T **4606**	1 VA		192T **4640**		2.5 VA	192T **4740**		
500 A	5 A				2.5 VA		192T **4650**	2.5 VA		192T **4750**		
600 A	5 A				2.5 VA		192T **4660**	2.5 VA		192T **4760**		
750 A	5 A				2.5 VA		192T **4675**	2.5 VA		192T **4775**		
800 A	5 A				2.5 VA		192T **4680**	2.5 VA		192T **4780**		
1000 A	5 A				5 VA		192T **4610**	5 VA		192T **4710**	10 VA	192T **4810**
1250 A	5 A							7.5 VA		192T **4712**	10 VA	192T **4812**
1500 A	5 A							7.5 VA		192T **4715**	10 VA	192T **4815**
1600 A	5 A										10 VA	192T **4814**
2000 A	5 A										10 VA	192T **4820**
2500 A	5 A										10 VA	192T **4825**
3000 A	5 A										15 VA	192T **4830**
4000 A	5 A										15 VA	192T **4840**
5000 A	5 A										15 VA	192T **4850**

Dimensions

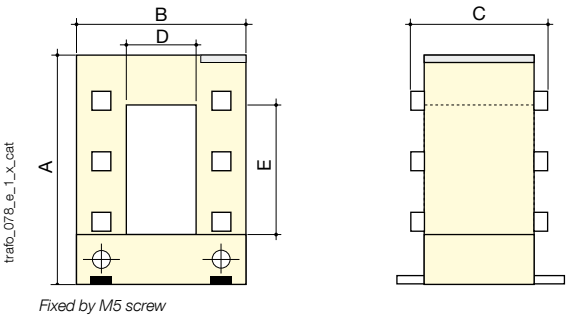

Fixed by M5 screw

Dimensions (mm)

Type	A (mm)	B (mm)	C (mm)	D (mm)	E (mm)
TO 23	106	93	58	23	33
TO 58	158	125	58	55	85
TO 812	198	155	58	85	125
TO 816	243	195	79	85	165

Split-core CT	TO 23	TO 58	TO 812	TO 816
H x W x D (mm)	106 x 93 x 58	158 x 125 x 58	198 x 155 x 58	243 x 195 x 75

socomec Innovative Power Solutions

Summation CT

Reference

Primary	Secondary	BSA 02 Reference	BSA 03 Reference	BSA 04 Reference
5 + 5/5 A	5 A	192T **0802**		
5A + 5+ 5/5	5 A		192T **0803**	
5 + 5 + 5 + 5/5 A	5 A			192T **0904**

Dimensions

BSA 02 and BSA 03

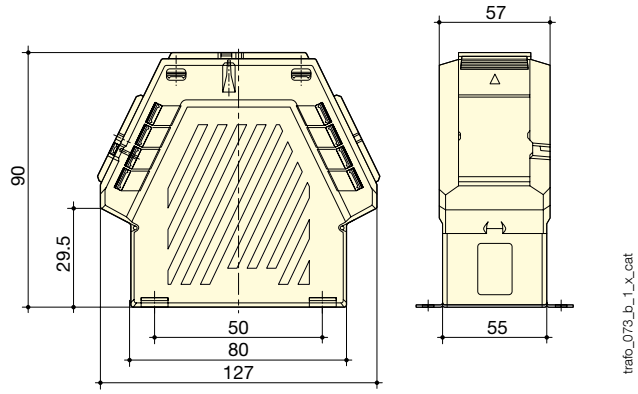

BSA 04

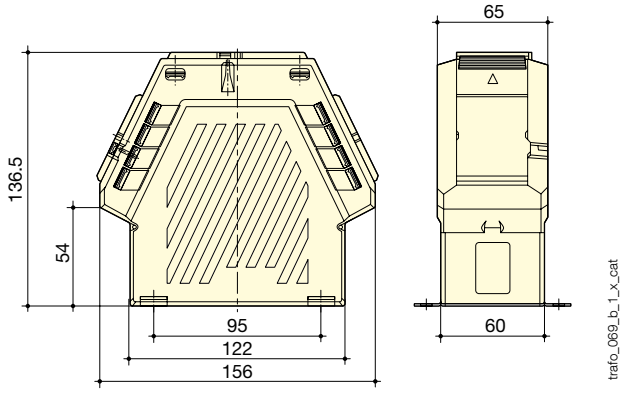

Summation CT	BSA 02	BSA 03	BSA 04
H x W x D (mm)	90 x 127 x 57	90 x 127 x 57	136.5 x 156 x 65
DIN-rail mounting	no	no	no