HFD4 SUBMINIATURE SIGNAL RELAY

c UL us
File No.:E133481

File No.:R50333270

CQC
File No.:CQC16002154335(Single side stable)
CQC16002154336(Latching)

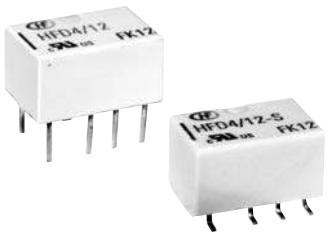

Features

- Offers excellent board space savings
- Surge withstand voltage up to 2500V, meets FCC Part 68 and Telecordia
- Meets EN60950/EN41003
- SMT and DIP types available
- High contact capacity 2A 30VDC
- Low power consumption
- Single side stable and latching type available
- Environmental friendly product (RoHS compliant)
- Outline Dimensions: (10.0 x 6.5 x 5.4) mm

CONTACT DATA

Contact arrangement	2C
Contact resistance	100mΩ max. (at 10mA 30mVDC)
Contact material	AgPd + Au plated, AgNi + Au plated
Contact rating (Res. load)	2A 30VDC 0.5A 125VAC
Max. switching current	2A
Max. switching voltage	250VAC / 220VDC
Max. switching power	62.5VA / 60W
Min. applicable load 1)	10mV 10μA
Mechanical endurance	1 x 10^8OPS
Electrical endurance 2)	1 x 10^5OPS (AgNi + Au plated, 0.5A 125VAC, Resistive load, at 40˚C, 1s on 9s off)

Notes: 1) Min. applicable load is reference value. Please perform the confirmation test with the actual load before production since reference value may change according to switching frequencies, environmental conditions and expected contact resistance and reliability.
2) Electric endurance data are collected in one pair CO contact test.

COIL

Coil power	Single side stable	See "COIL DATA"
	1 coil latching	See "COIL DATA"
Temperature rise	50K max.(At 1A load, 85˚C environment)	

CHARACTERISTICS

Insulation resistance		1000MΩ (at 500VDC)
Dielectric strength	Between coil & contacts	1600VAC 1min
	Between open contacts	1000VAC 1min
	Between contact sets	1800VAC 1min
Surge withstand voltage Between open contacts (10/160μs) Between coil & contacts (2/10μs)		 1500VAC (FCC part 68) 2500VAC (Telecordia)
Operate time (Set time)		3ms max.
Release time (Reset time)		3ms max.
Ambient temperature		-40˚C to 85˚C
Humidity		5% to 85% RH
Vibration resistance		10Hz to 55Hz 3.3mm DA
Shock resistance	Functional	735m/s^2
	Destructive	980m/s^2
Termination		DIP, SMT
Unit weight		Approx. 0.8g
Moisture sensitivity levels (Only for SMT type, JEDEC-STD-020)		MSL 3
Construction		Plastic sealed

Notes: 1) The data shown above are initial values.
2) UL insulation system: Class A

SAFETY APPROVAL RATINGS

UL/CUL	AgPd + Au plated	0.5A 125VAC at 70˚C
	AgNi + Au plated	1A 30VDC at 85˚C 2A 30VDC at 40˚C 0.5A 125VAC at 40˚C
TUV	AgPd + Au plated	0.5A 125VAC at 85˚C
	AgNi + Au plated	1A 30VDC at 85˚C 0.5A 125VAC at 85˚C

Notes: 1) All values unspecified are at room temperature.
2) Only typical loads are listed above. Other load specifications can be available upon request.

COIL DATA

at 23˚C

Single side stable

Coil Code	Nominal Voltage VDC	Pick-up Voltage VDC max.	Drop-out Voltage VDC min.	Coil Resistance Ω	Nominal Power mW approx.	Max. Voltage VDC
HFD4/1.5	1.5	1.13	0.15	16 x (1±10%)	140	2.2
HFD4/2.4	2.4	1.8	0.24	41 x (1±10%)	140	3.6
HFD4/3	3	2.25	0.3	64.3 x (1±10%)	140	4.5
HFD4/4.5	4.5	3.38	0.45	145 x (1±10%)	140	6.7
HFD4/5	5	3.75	0.5	178 x (1±10%)	140	7.5
HFD4/6	6	4.5	0.6	257 x (1±10%)	140	9.0
HFD4/9	9	6.75	0.9	579 x (1±10%)	140	13.5
HFD4/12	12	9	1.2	1028 x (1±10%)	140	18.0
HFD4/24	24	18	2.4	2880 x (1±10%)	200	36.0

1 coil latching

Coil Code	Nominal Voltage VDC	Set Voltage VDC max.	Reset Voltage VDC max.	Coil Resistance Ω	Nominal Power mW approx.	Max. Voltage VDC
HFD4/1.5-L	1.5	1.13	1.13	22.5 x (1±10%)	100	3.0
HFD4/2.4-L	2.4	1.8	1.8	58 x (1±10%)	100	4.8
HFD4/3-L	3	2.25	2.25	90 x (1±10%)	100	6.0
HFD4/4.5-L	4.5	3.38	3.38	203 x (1±10%)	100	9.0
HFD4/5-L	5	3.75	3.75	250 x (1±10%)	100	10.0
HFD4/6-L	6	4.5	4.5	360 x (1±10%)	100	12.0
HFD4/9-L	9	6.75	6.75	810 x (1±10%)	100	18.0
HFD4/12-L	12	9	9	1440 x (1±10%)	100	24.0
HFD4/24-L	24	18	18	2880 x (1±10%)	200	36.0

Notes: 1) When user's requirements can't be found in the above table,special order allowed.
2) In case 5V of transistor drive circuit, it is recommended to use 4.5V type relay, and 3V to use 2.4V type relay.

ORDERING INFORMATION

	HFD4 /	24	-L	4	S	R	(XXX)
Type							
Coil voltage	1.5, 2.4, 3, 4.5, 5, 6, 9, 12, 24VDC						
Sort	**L:** 1 coil latching	**Nil:** Single side stable					
Contact material	**4:** AgPd+Gold plated	**Nil:** AgNi+Gold plated					
Terminal type	**S:** Standard SMT	**S1:** Short terminal SMT	**Nil:** DIP				
Packing style	**R:** Tape and reel packing (Only for SMT type)[1)] **Nil:** Tube packing(Only for DIP type)						
Special code[2)]	**XXX:** Customer special requirement	**Nil:** Standard					

Notes: 1) R type (tape and reel) packing is moisture-proof which meets requirement of MSL-3. Please choose R type packing for SMT products. For R type, the letter "R" will only be printed on packing tag but not on relay cover. Tube packing is normally not available for SMT products unless specially requested by customer. But please note that tube packing is not moisture-proof so please bake the products before use according to description of Notice 10 herewith. In addition, tube packaging will be adopted when the ordering quantity of R type is equal to or less than 100 pieces unless otherwise specified.

2) The customer special requirement express as special code after evaluating by Hongfa.

OUTLINE DIMENSIONS, WIRING DIAGRAM AND PC BOARD LAYOUT

Unit: mm

Outline Dimensions

PCB Layout

(Bottom view)

DIP type

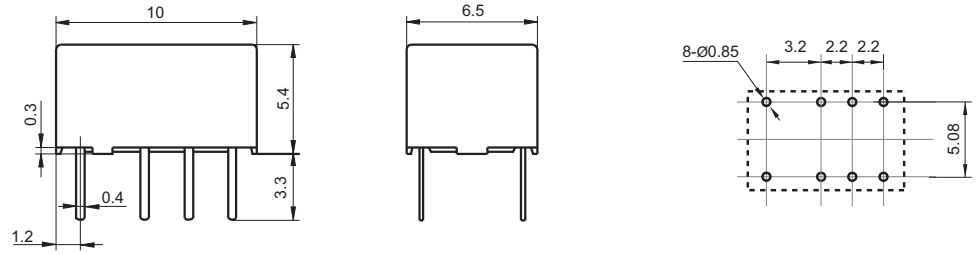

Standard SMT type

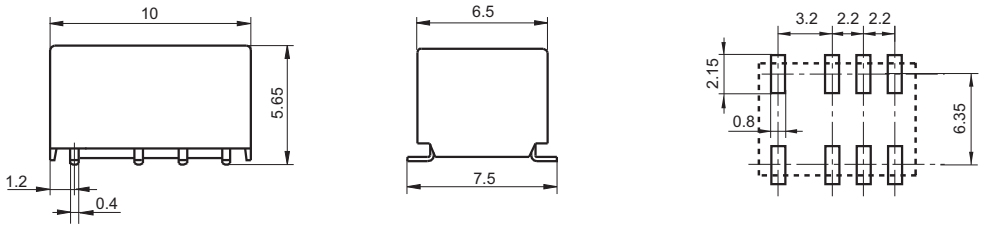

Short terminal SMT type

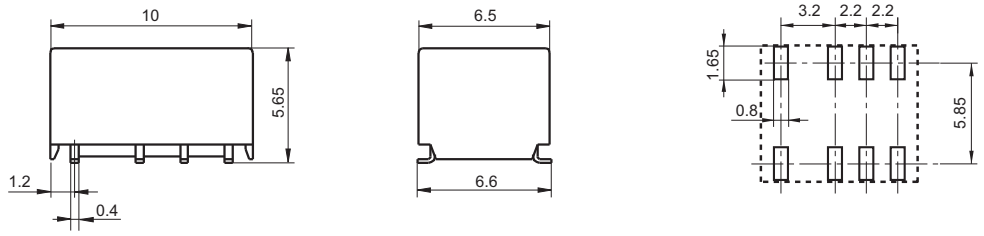

Wiring Diagram

(Bottom view)

Single side stable

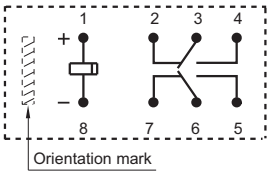

No energized condition

1 coil latching

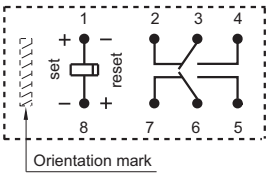

Reset condition

Remark: 1) In case of no tolerance shown in outline dimension: outline dimension ≤1mm, tolerance should be ±0.2mm; outline dimension >1mm and ≤5mm, tolerance should be ±0.3mm; outline dimension >5mm, tolerance should be ±0.4mm.

2) The tolerance without indicating for PCB layout is always ±0.1mm.

TAPE PACKING

Unit: mm

Direction of Relay Insertion

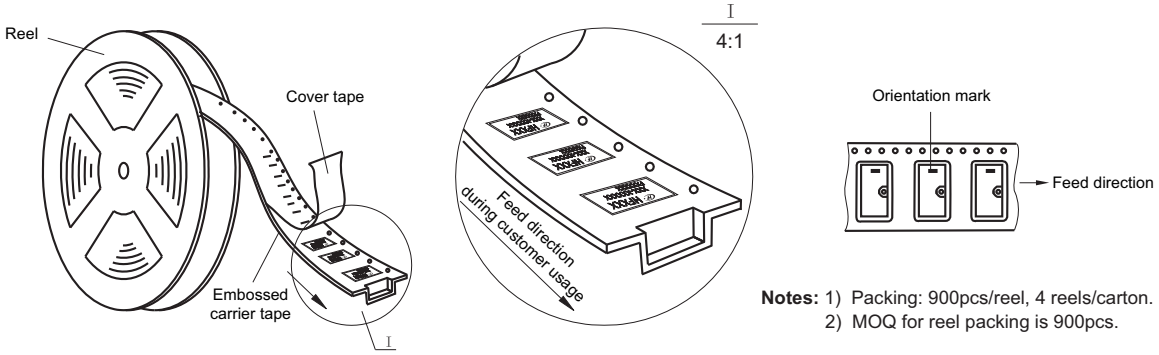

Notes: 1) Packing: 900pcs/reel, 4 reels/carton.
2) MOQ for reel packing is 900pcs.

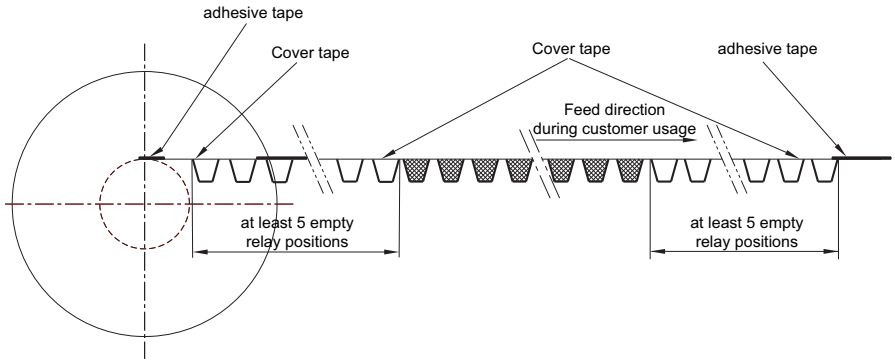

Reel Dimensions

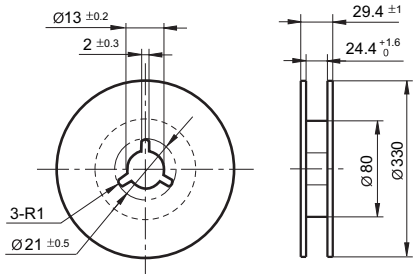

Tape Dimensions (S type: Standard SMT)

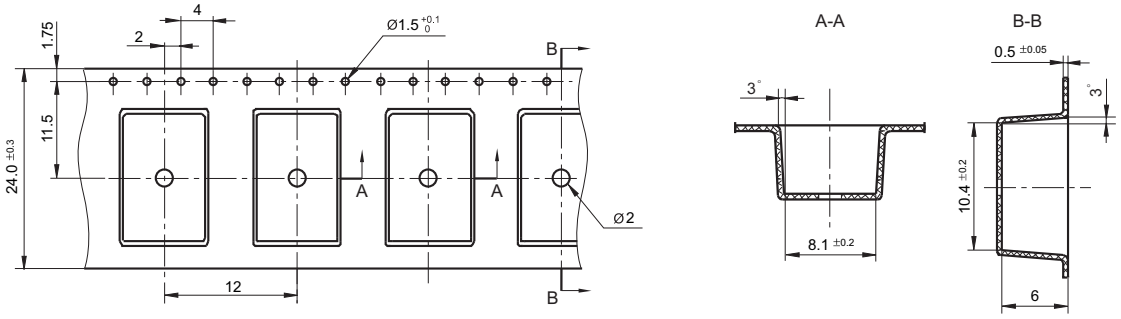

TAPE PACKING

Unit: mm

Tape Dimensions (S1 type: Short terminal SMT)

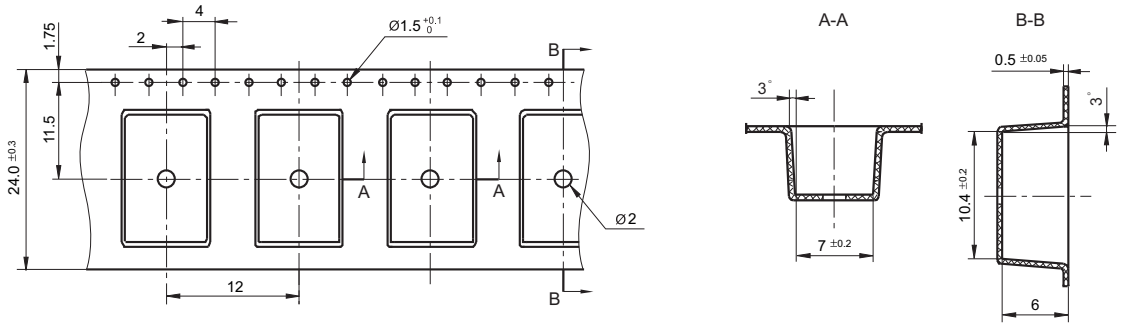

Remark: 1) In case of no tolerance shown in outline dimension: outline dimension ≤1mm, tolerance should be ±0.2mm; outline dimension >1mm and ≤5mm, tolerance should be ±0.3mm; outline dimension >5mm, tolerance should be ±0.4mm.
2) The tolerance without indicating for PCB layout is always ±0.1mm.
3) The width of the gridding is 2.54mm.

CHARACTERISTIC CURVES

MAXIMUM SWITCHING POWER

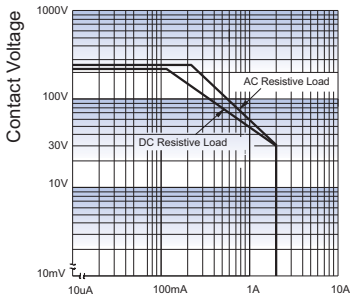

ENDURANCE CURVE

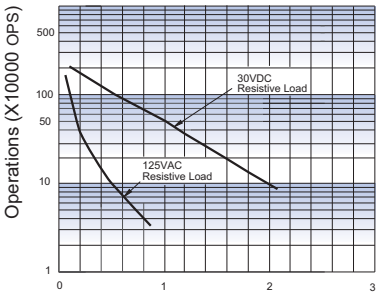

REFLOW WELDING,TEMPERATURE ON PCB BOARD

RECOMMENDED WELDING TEMPERATURE

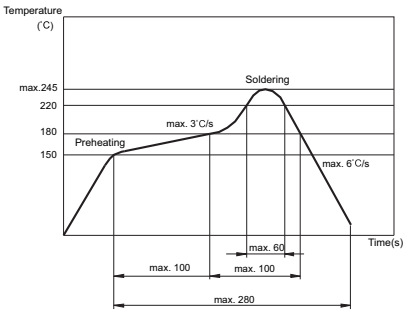

Test conditions:
Resistive load, at 40°C, 1s on 9s off.

Notice

1) This relay is highly sensitive polarized relay, if correct polarity is not applied to the coil terminals, the relay does not operate properly.
2) To avoid using relays under strong magnetic field which will change the parameters of relays such as pick-up voltage and drop-out voltage.
3) Relay is on the “reset” status when being released from stock, with the consideration of shock risen from transit and relay mounting, it should be changed to the “set” status when application(connecting to the power supply). Please reset the relay to “set” or “reset” status on request.
4) Energizing coil with rated voltage is basic for normal operation of a relay, please make sure the energized voltage to relay coil have reached the rated voltage. Regarding latching relay, in order to maintain the "set" or "reset" status, impulse width of the rated voltage applied to coil should be more than 5 times of "set" or "reset" time.
5) The relay may be damaged because of falling or when shocking conditions exceed the requirement.
6) For SMT products, validation with real application should be done before your series production, if the reflow-soldering temperature curve is out of our recommendation. Generally, two-time reflow-soldering is not recommended for the relay. However, if two-time reflow-soldering is required, a 60-min. interval should be guaranteed and a validation should be done before production.
7) Contact is recommended for suitable condition and specifications if water cleaning or surface process is involved in assembling relays on PCB.
8) Regarding the plastic sealed relay, we should leave it cooling naturally untill below 40°C after welding, then clean it and deal with coating, remarkably the temperature of solvents should also be controlled below 40°C.Please avoid cleaning the relay by ultrasonic, avoid using the solvents like gasoline, Freon, and so on, which would affect the configuration of relay or influence the environment.
9) About preferable condition of operation, storage and transportation, please refer to "Explanation to terminology and guidetines of relay".
10) Relays packaged in moisture barrier bags meet MSL-3 requirements. The relays should be stored at ambient conditions of ≤30℃ and ≤60% RH after they are removed from their packaging, and should be used within 168 hours. If the relays cannot be used within 168 hours, please repack them or store them in a drying oven at 25℃±5℃, ≤10% RH. Otherwise, relays may be subjected to a soldering test to check their performance, or they may be used after keeping them in an oven for 72 hours at with 50℃±5℃, ≤30% RH.

Disclaimer

The specification is for reference only. See to "Terminology and Guidelines" for more information. Specifications subject to change without notice. We could not evaluate all the performance and all the parameters for every possible application. Thus the user should be in a right position to choose the suitable product for their own application. If there is any query, please contact Hongfa for the technical service. However, it is the user’s responsibility to determine which product should be used only.

© Xiamen Hongfa Electroacoustic Co., Ltd. All rights of Hongfa are reserved.