

Model Number

M12/MV12-F1/76b/82b/124/128

Thru-beam sensor

with 5-pin M12 connector, 90° adjustable position

Features

- Series of sensors in a widely used standard housing
- TEACH-IN switch for setting the contrast detection levels
- Automatic adjustment in case of soiling in contrast detection mode
- High level of stability thanks to the metal housing frame
- Resistant against noise: reliable operation under all conditions

Dimensions

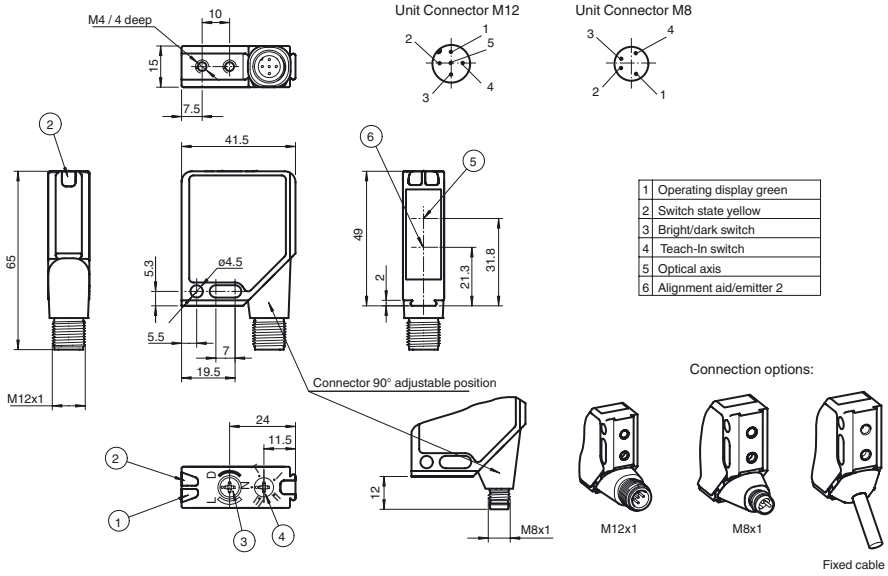

Electrical connection

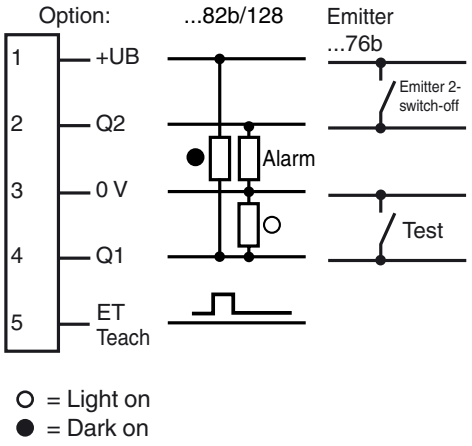

Pinout

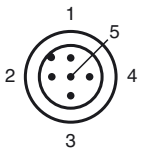

Release date: 2014-07-10 10:45 Date of issue: 2014-07-10 115971_eng.xml

Technical data

System components		
Emitter		M12-F1/76b/124
Receiver		MV12-F1/82b/124/128
General specifications		
Effective detection range		0 ... 16 m
Threshold detection range		25 m
Light source		2 LED
Light type		modulated visible red light , 660 nm
Target size		min. 12 mm
Alignment aid		LED red in receiver
Diameter of the light spot		approx. 420 mm at a distance of 16 m
Angle of divergence		1.5 °
Ambient light limit		
Continuous light		40000 Lux
Modulated light		5000 Lux
Functional safety related parameters		
$MTTF_d$		570 a
Mission Time (T_M)		20 a
Diagnostic Coverage (DC)		90 %
Indicators/operating means		
Operation indicator		LED green, flashes in case of short-circuit
Function indicator		2 LEDs yellow for switching state, stability control, TEACH-IN and contrast detection mode
Control elements		rotary switch for light/dark, 5-step switch for contrast recognition adjustment
Contrast detection levels		15 % - clear glass bottles 25 % - plastic foils 40 % - colored glass or opaque materials adjustable by Teach-In key or external wire
Electrical specifications		
Operating voltage	U_B	10 ... 30 V DC
Ripple		max. 10 %
No-load supply current	I_0	Emitter: ≤ 35 mA Receiver: ≤ 45 mA
Input		
Test input		emitter deactivation at 0 V
Function input		Ext. Teach-In input (ET)
Output		
Pre-fault indication output		1 PNP, inactive when level falls below function reserve after approx. 5 s. Immediately inactive if the beam is interrupted 4 times during the flashtime.
Switching type		light/dark on, switchable
Signal output		1 push-pull (4 in 1) output, short-circuit protected, reverse polarity protected
Switching voltage		max. 30 V DC
Switching current		max. 0.2 A
Voltage drop	U_d	≤ 2.5 V DC
Switching frequency	f	1000 Hz
Response time		0.5 ms
Ambient conditions		
Ambient temperature		-40 ... 60 °C (-40 ... 140 °F)
Storage temperature		-40 ... 75 °C (-40 ... 167 °F)
Mechanical specifications		
Degree of protection		IP67
Connection		Metal connector, M12, 5-pin, 90° rotatable
Material		
Housing		Frame: nickel plated, die cast zinc, Laterals: glass-fiber reinforced plastic PC
Optical face		Plastic pane
Mass		120 g (emitter and receiver)
Compliance with standards and directives		
Standard conformity		
Product standard		EN 60947-5-2:2007 IEC 60947-5-2:2007
Shock and impact resistance		IEC / EN 60068. half-sine, 40 g in each X, Y and Z directions
Vibration resistance		IEC / EN 60068-2-6. Sinus. 10 -150 Hz, 5 g in each X, Y and Z directions
Approvals and certificates		
Protection class		II, rated voltage ≤ 300 V AC with pollution degree 1-2 according to IEC 60664-1
UL approval		cULus
CCC approval		CCC approval / marking not required for products rated ≤36 V

Accessories

OMH-MLV12-HWG
Mounting bracket for series MLV12 sensors

OMH-MLV12-HWK
Mounting bracket for series MLV12 sensors

OMH-K01
dove tail mounting clamp

OMH-K02
dove tail mounting clamp

OMH-K03
dove tail mounting clamp

OMH-06
Mounting aid for round steel ø 12 mm or sheet 1.5 mm ... 3 mm

V15-G-2M-PUR
Female cordset, M12, 5-pin, PUR cable

V15-W-2M-PUR
Female cordset, M12, 5-pin, PUR cable

Other suitable accessories can be found at www.pepperl-fuchs.com

Release date: 2014-07-10 10:45 Date of issue: 2014-07-10 115971_eng.xml

Refer to "General Notes Relating to Pepperl+Fuchs Product Information".
Pepperl+Fuchs Group www.pepperl-fuchs.com
USA: +1 330 486 0001 fa-info@us.pepperl-fuchs.com
Germany: +49 621 776 4411 fa-info@de.pepperl-fuchs.com
Singapore: +65 6779 9091 fa-info@sg.pepperl-fuchs.com
PEPPERL+FUCHS SENSING YOUR NEEDS

Curves/Diagrams

Characteristic response curve

M12/MV12

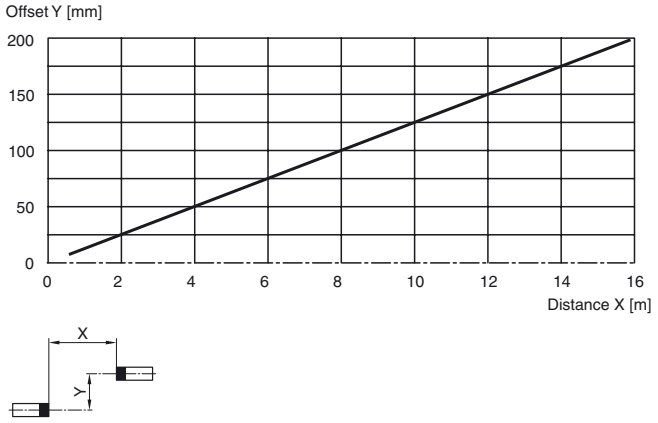

Relative received light strength

M12/MV12

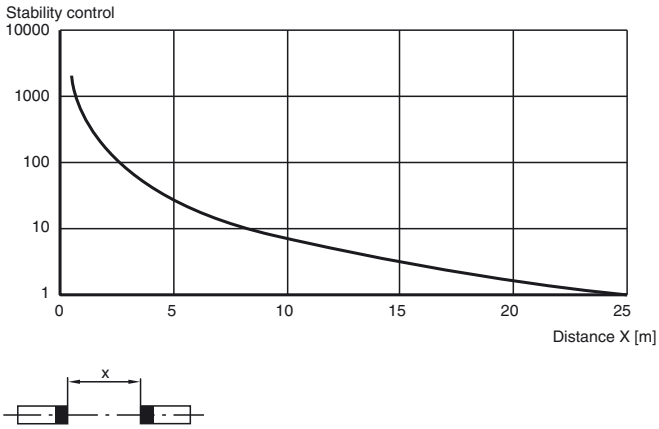

Notes

Alignment

In switching position "N" senders and recipients align to:
Yellow LED lights up constantly, red LED is off.

TEACH-IN

- **Switch position "N" (standard operation):**
  LEDs are lit when the light beam is unobstructed, they flash when the value falls short of the function reserve and switch off when the beam is interrupted.
- **Switch position "T" (Teach-in mode):**
  After 1 s, the LED flashes slowly (approx. 1.5 Hz). The sensor is now ready to be set for a specific contrast detection value either via the mechanical switch (pos. I, II or III) or an external signal.
- **Switch positions "I", "II" and "III" (contrast detection mode)**
  Contrast recognition values: I for 15 %, II for 25 %, III for 40 %
  1. LED permanently lit: light path unobstructed
  2. LED off: element to be sensed detected
  3. LED flashes rapidly: detection failure, excessive soiling, function reserve too low.
- **Ext. TEACH-IN input**
  The desired contrast recognition capability can be adjusted by applying of a logic „high“ pulse with a certain pulse length when the switch is in position T.
  I: 50 ms (30 ms ... 100 ms)
  II: 150 ms (100 ms ... 200 ms)
  III: > 200 ms
  Mode selector in position T.

Release date: 2014-07-10 10:45 Date of issue: 2014-07-10 115971_eng.xml