Sealed Rocker Switch

Single Pole
KR Series



Features
- Snap-in mounting
- RoHS compliant
- 100,000 cycles mechanical life
- IP65
- Lighted and non-lighted versions available

Standard Parts[1]

North America	North America and Europe	Europe
KRE2ALA2RBB	KRE2ANA1BBD KRE2BNA1BBB KRE2DNA1BBB	KRE2AEA2GBB KRE2AEA2RBB

[1]The part number configuration matrix below provides details to the part numbers above.
For configurable part numbers that are not listed above, not listed in your region, or for custom part numbers, contact the factory or your distributor.

Part Number Breakdown

KRE2ALA 2RBB

KR E 2 A L A

Series

KR

Contact Rating[2]

E

Circuitry

2	Single pole

Switch Function

A	ON-OFF
B[3]	ON-ON
D	(ON)-OFF

Lighting Options

N	Non-lighted
E	220 VAC neon
L	110 VAC neon
C	28 VDC LED
M	14 VDC LED

Terminal Type

A	4.75 mm (0.187") quick connect

[2]See Electrical Specifications section
[3]Available only with non-lighted version

2 R B B

Actuator Type

1	Non-lighted
2	Lighted

Actuator Color[4]

A	Amber
B	Black
G	Green
R	Red

Housing Color

B	Black

Actuator Marking[4]

B	Blank
D	O —

[4]Black actuator is only available for non-lighted; others only for lighted. Only non-lighted actuators can be marked.

Electrical Specifications

Dielectric Strength	1500 VAC for 1 minute
Insulation Resistance	100 MΩ min at 500 VDC
Initial Contact Resistance	0.050 Ω max
Electrical Ratings – UL1054	
VAC: 16 A 125 VAC 1/3 HP / 10 A 250 VAC 1/2 HP	VDC: 16 A 14 VDC / 6 A 28 VDC
Electrical Life at Rated Load Minimum Operations	UL 6,000

UL File No: E23301

Material and Environmental Specifications

Actuator, non-lighted	Nylon 66 94 V-2
Actuator, lighted	Polycarbonate
Housing	Nylon 66 94 V-2
Spring	Steel Wire
Contacts	Silver Alloy
Movable Arm	Silver
Terminals	Silver-Plated Copper Alloy
Rubber Boot	Silicone
Operating Temperature Range	-25 °C to +85 °C (-13 °F to +185 °F)
Ingress Protection	IP65

Circuitry and Switch Functions – (ON)-OFF has same connections as ON-OFF; spring return on switch

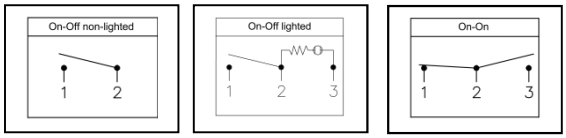

Dimensions mm (inches)

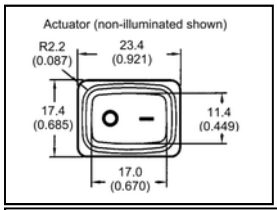

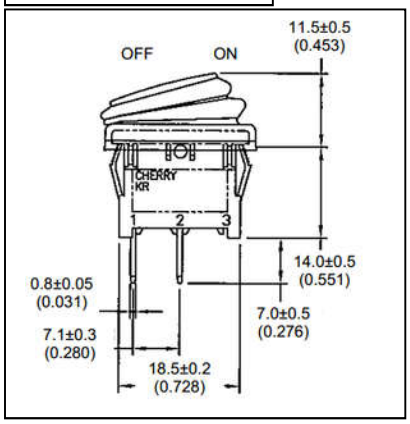

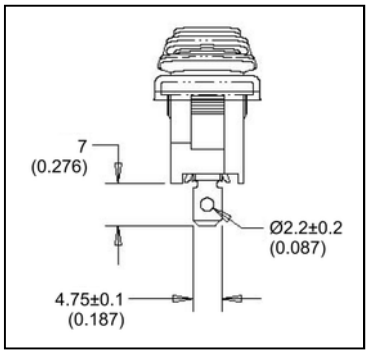

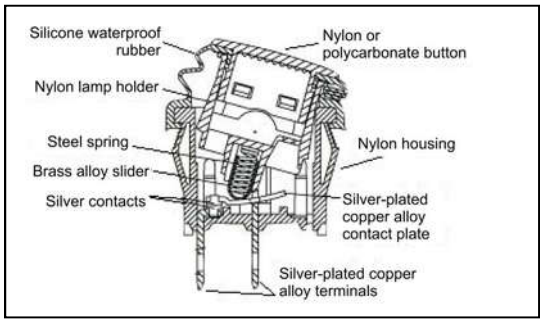

Recommended Panel Cut-Out Dimensions

Panel thickness	Dimension Y	Dimension X
0.75 to 1.50 (0.030 to 0.059)	19.4-0.1 (0.764+0.004)	13+0.1 (0.512+0.004)
1.50 to 2.50 (0.049 to 0.098)	19.8-0.1 (0.780+0.004)	