Brand of NTN corporation

Technical data

UCT210N

Bearing units



Grey cast housing, radial insert ball bearing with socket set screws,seal with slinger

KIT CONTENT

UC210G2, T210N

VISUAL (S)

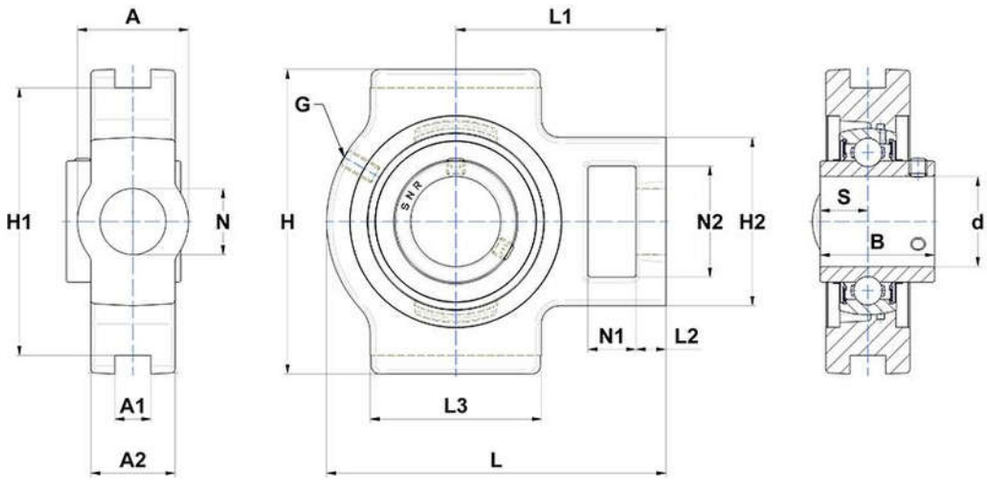

PRODUCT DEFINITION

Brand	SNR
A - Housing width	49 mm
A1 - Width of location slot	16 mm
A2	37 mm
B - Width of Inner Ring	51,6 mm
d - Shaft diameter	50 mm

NTN Europe
1 rue des Usines · BP 2017 · 74010 Annecy Cedex · France · Tel. +33 (0)4 50 65 30 00
S.A. au capital de 322 639 919 € · RCS ANNECY B 325 821 072 · Id. Fiscale : FR 48 325 821 072
SIRET 325 821 072 00015 · Code APE 2815 Z · Code NACE 28.15

PRODUCT DEFINITION	
G - Grease fitting	M6x1
H - Housing length, width or diameter	117 mm
H1 - Distance between location slots	102 mm
H2 - Housing height / width	83 mm
L - Housing length	149 mm
L1 - Distance attachment end face to bearing centerline	90 mm
L2 - Thickness of attachment end	16 mm
L3 - Length of guidance slot/face	86 mm
N - Mounting hole dimension	29 mm
N1 - Length of attachment slot	19 mm
N2 - Height of attachment slot	49 mm
S - Distance front side/bearing centre	19 mm

PRODUCT PERFORMANCE	
C - Dynamic load rating	35100000 mN
C0 - Static load rating	23200000 mN
Operating temperature min.	253,15 °K
Operating temperature max.	373,15 °K

OTHER FEATURES	
Mass	2,4 kg
Recommended tightening torque for set screw	22 N-m