TI01681F/00/EN/01.22-00
71563553
2022-04-14

Technical Information
Khafagi-Venturi QV302...QV316

Flow measurement

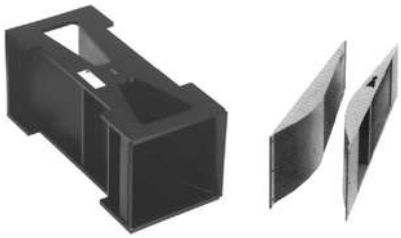

Open flume for flow measurement with ultrasonic technology

Application

Khafagi-Venturi flumes are used to measure the outflow in open channels. The inflow and outflow of industrial and municipal wastewater can be measured with these flumes. Khafagi-Venturi flumes are available as a complete insert or as half-shells. The complete Khafagi-Venturi insert is best installed where it is directly fitted into a new channel under construction. It is a fully calibrated unit which guarantees maximum accuracy. Khafagi-Venturi half-shells can also be easily integrated into existing channels with minimum effort.

Your benefits

- Nine standard sizes for flow rates ranging from 0.4 l/s to 1 500 l/s.
- Fully calibrated unit ensures maximum accuracy.
- Resistant to acidic or basic wastewater, with no washout and low build-up.
- Flow-optimized flume design guarantees the lowest possible upper water level.

Endress+Hauser
People for Process Automation

Table of contents

Document information 3
Document conventions 3

Function and system design 3
Measuring system 3
Structure of the flume 4

Mounting 6
Mounting Khafagi-Venturi flumes 6
Mounting Khafagi-Venturi half-shells 7
Preparations for the installation of the sensor 7

Process 8

Mechanical construction 9
Khafagi-Venturi flumes 9
Khafagi-Venturi half-shells 11
Materials 11

Supplementary documentation 12

Document information

Document conventions

Safety symbols

DANGER
This symbol alerts you to a dangerous situation. Failure to avoid this situation will result in serious or fatal injury.

WARNING
This symbol alerts you to a dangerous situation. Failure to avoid this situation can result in serious or fatal injury.

CAUTION
This symbol alerts you to a dangerous situation. Failure to avoid this situation can result in minor or medium injury.

NOTICE
This symbol contains information on procedures and other facts which do not result in personal injury.

Symbols for certain types of information

Symbol	Meaning
	**Permitted** Procedures, processes or actions that are permitted.
	**Forbidden** Procedures, processes or actions that are forbidden.
	**Tip** Indicates additional information.
	Reference to documentation
▶	Notice or individual step to be observed
1., 2., 3...	Series of steps

Symbols in graphics

Symbol	Meaning
1, 2, 3 ...	Item numbers
1., 2., 3...	Series of steps
A, B, C, ...	Views
	**Hazardous area** Indicates the hazardous area.
	**Safe area (non-hazardous area)** Indicates the non-hazardous area.

Function and system design

Khafagi-Venturi flumes are used to measure the outflow in open channels. The inflow and outflow of industrial and municipal wastewater can be measured with these flumes. Khafagi-Venturi flumes are available as a complete insert or as half-shells. The complete Khafagi-Venturi insert is best installed where it is directly fitted into a new channel under construction. It is a fully calibrated unit which guarantees maximum accuracy. Khafagi-Venturi half-shells can also be easily integrated into existing channels with minimum effort.

Measuring system

The Khafagi-Venturi insert used in an open channel provides a direct correlation between the flow rate (l/s...m^3/h) and the upper water level. The flow rate can be calculated directly from the height of the water upstream from the Venturi constriction. A non-contact, maintenance-free ultrasonic

transmitter (e.g. Prosonic S) measures the upper water level. The integrated flow computer converts the measured value of the upper water level to a flow rate at the outflow. The volume of water flowing is totalized and displayed by the integrated counter (see figure).

Additional features:
- Low flow cut off for flow measurements
- Detecting and signaling the backwater or dirt of the flume
- control a sampler on either a volume or time basis

The linearization curves of all common standard channels and weirs are already programmed in and can be called up. Special designs can be individually programmed as required.

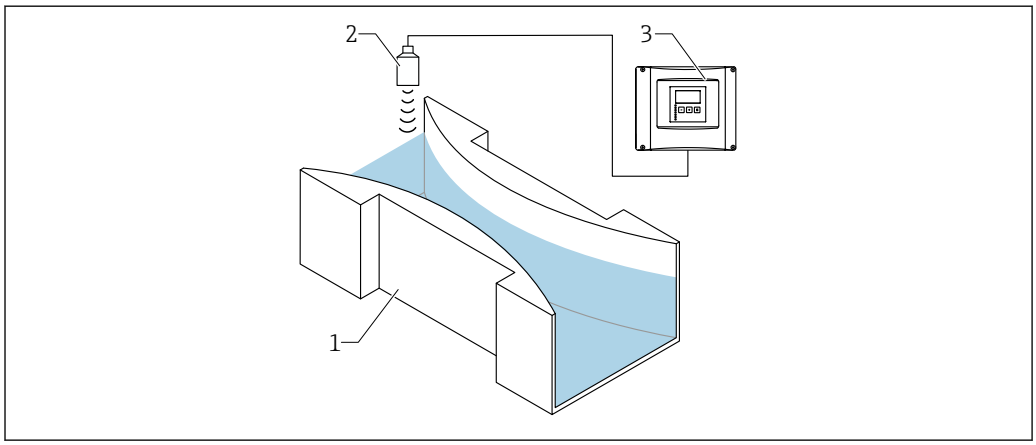

1 Khafagi-Venturi flume
2 Ultrasonic sensor FDU9x
3 FMU90 transmitter

Structure of the flume

The inlet to the throat is an arc of a circle. As the length of the inlet matches the width of the channel, frictional loss is negligible, with small effects caused by the curvature of stream threads. Compared with other flumes, this design enables larger outflow with the same upper water level. For the Khafagi-Venturi flume, the value 0.4 was selected for the b_2:b_1 ratio (constriction width: inlet width), which is the optimum value between the water height at the inlet and the accuracy of the system. The widening after the constriction (= diffuser) has a ratio of 1:8 to keep losses as low as possible. A change in flow is produced in the constriction, which creates the difference in height that is required for outflow measurement. The primary advantage over weirs is that no sediment can form upstream or in the flume at certain flow velocities because of the flume's continuous, flat and smooth base. This ensures long-term accuracy without the need for maintenance. The Hydraulic Engineering Institute (Institut für Wasserbau) at the University of Stuttgart calibrated the Khafagi-Venturi flumes individually on a test bench using the following formula for the outflow:

$Q = 0.01744 \cdot b_2 \cdot h^{1.5} + 0.00091 \cdot h^{2.5}$

Q ≙ outflow [l/s]

b_2 ≙ constriction width [cm]

h ≙ level upstream of flume [cm]

In the outflow range from 6 % to 20 %, Khafagi-Venturi flumes [1)] have a maximum measured error of 2 %. In the outflow range from 20 % to 100 %, the maximum measured error is 1 %. The measured error of the final reading is below 0.4 % over the entire outflow range.

The Khafagi-Venturi flumes are highly durable and require little maintenance due to the use of materials which have excellent resistance to chemicals and mechanical wear. These features significantly increase the lifetime of the flume.

1) Khafagi-Venturi flumes calibrated under reference conditions

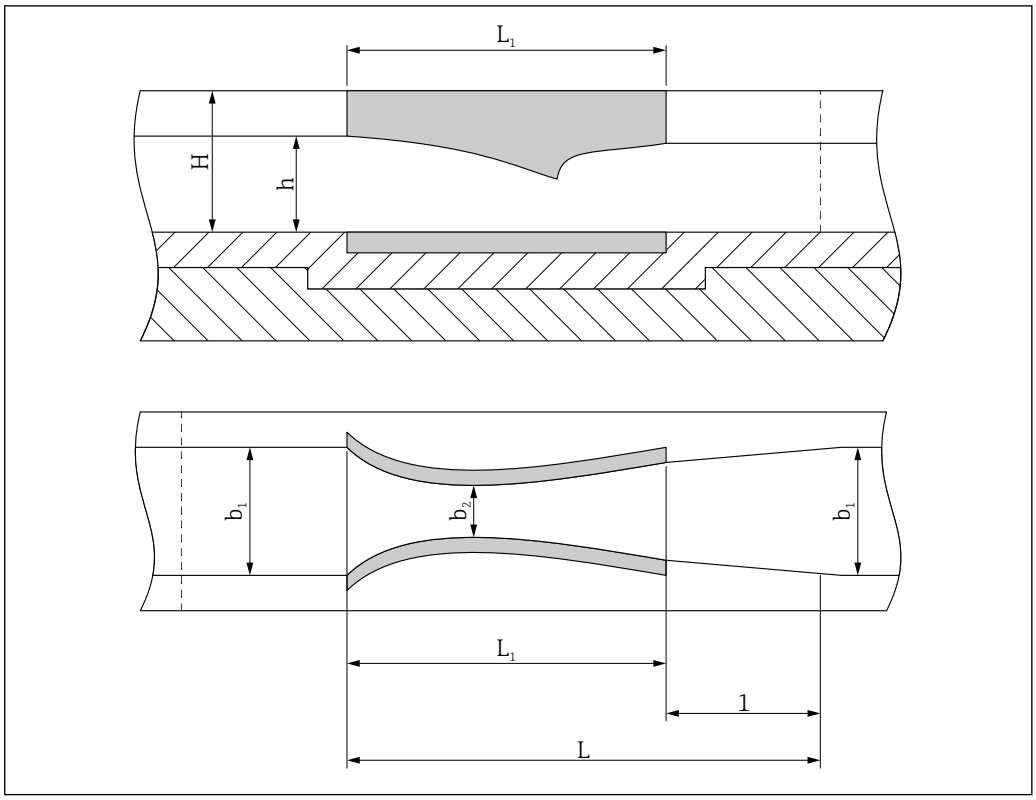

1 *Dimensions of Khafagi-Venturi flumes*

1 Diffuser
b_1 Inlet width
b_2 Constriction width
L_1 Flume length
L Length to end of diffuser
H Flume height
h Upper water level

Flow rates of standard sizes for complete Khafagi-Venturi flumes (standard version has higher side walls)

Type	Channel width b_1	Maximum flow Q				Water height at the inlet h at Q_{max}	
				With higher side walls			With higher side walls
	mm	l/s	m^3 /h	l/s	m^3 /h	mm	mm
QV302	120	11	40	22	80	224	324
QV303	300	25	90	50	180	228	351
QV304	400	50	180	100	360	297	461
QV305	500	90	320	180	640	381	585
QV306	600	100	360	200	720	366	567
QV308	800	250	900	500	1800	557	853
QV310	1000	500	1800	1000	3600	752	1158
QV313	1300	800	2880	1600	5760	870	1343
QV316	1600	1500	5400	3000	10800	1147	1768

Mounting

Mounting Khafagi-Venturi flumes

Install the flume at a place where the wastewater flows smoothly without agitation - i.e. at normal velocity - to the flume. Dropped beds creating a water surge or bends immediately upstream from the measuring system can lead to significant errors when measuring the volume of water. Therefore a straight channel section of at least $10 \cdot b_1$ upstream from the measuring system is required (b_1 = channel width).

The following channel paths of gentle flow should be used:

a) $10 \cdot b_1$ suffices downstream from a bend

b) $30 \cdot b_1$ downstream from lateral flow

c) $50 \cdot b_1$ downstream from a weir.

If the flume is fed by a pipe, it is sufficient to have a short, rectangular channel section measuring 3 x b_1 in length upstream from the flume as the calming section after a smooth transition from a circular to a rectangular plane. All other requirements are the same as for a, b, and c. The channel slope should be approx. 2 ‰ to 5 ‰ (outlet into a shaft after $2 \cdot b_1$ downstream from diffuser is possible). The walls and base of the channel must be as smooth as possible. At minimum outflow, the flow velocity of the wastewater should be 0.6 m/s so that the solids can be transported away easily. On the other hand, the slope should not be too large as otherwise the outlet downstream from the flume will gush out too quickly. The outlet channel should not contain any parts that can affect the level. The longitudinal axis of the flume must exactly match that of the inlet channel. Four reference points on the upper surface of the flume are used to position the flume accurately.

Prepare the concrete base and set the flume on it.

Ensure the following:
- The flume is in the correct flow direction
- The floor is perfectly horizontal
- There is no drop bed at the inlet
- The flume is aligned exactly with the channel
- No water remains in the flume if the channel is dry

There should be an expansion gap with a width of 10 to 15 mm (0.39 to 0.59 in) at the start and end of the flume and filled with a permanently elastic grouting. Fill the space beside the side walls with non-compacted lean concrete (do not vibrate!).

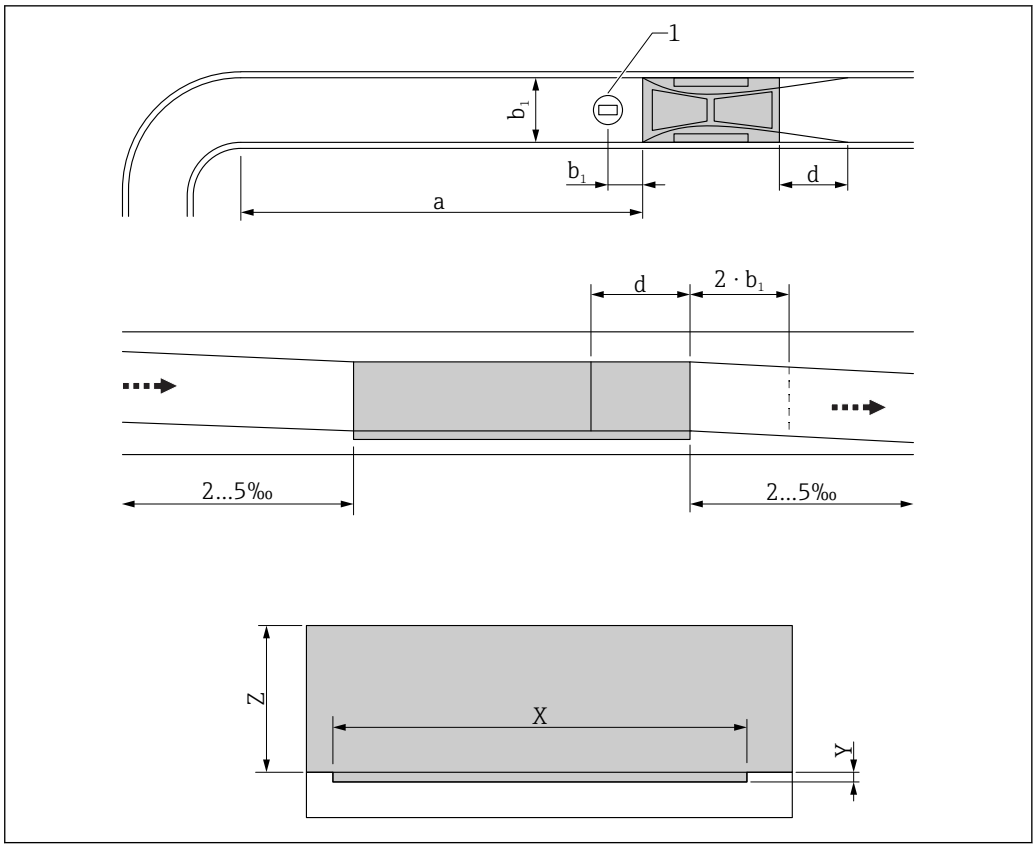

1 *Sensor*
a *At least 10 · b_1*
b1 *Inlet width*
d *Diffuser (outlet widening not required for QV 302)*
X *Length of recess (recess required in channel floor (for complete flumes))*
Y *Depth of recess*
Z *Minimum channel height*

Mounting Khafagi-Venturi half-shells

Take the following measures if it is not possible to install an entire flume and two half-shells must be mounted in an existing channel instead:

- Use the same calming sections that are used when installing complete Khafagi-Venturi flumes
- Ensure that the installation point has a channel bottom which is even and smooth
- The half-shells must be exactly opposite one another
- The half-shells must lie on the base of the channel
- It is essential to comply fully with the dimensions b_2 (constriction width) and b_1 (inlet width = outlet width), (from the upper edge to the lower edge of the half-shells)
  Avoid any edges on the side walls or on the path between the flume and the diffuser. Allowance should be made for the drop bed.

Preparations for the installation of the sensor

Measuring the upper water level with the ultrasonic transmitter Prosonic S

Mount the sensor Prosonic S FDU9x for measuring the water height at the inlet (upper water level) about one channel width b_1 upstream from the inlet to the flume. Preferably mount ultrasonic sensors with a special bracket. With the bracket it is possible to align the sensor at a certain distance to the water surface and the channel wall. The surface of the sensor must always be mounted parallel to the surface of the water. The Prosonic S FMU90 transmitter can be mounted in different ways in the field and in the control room. For more detailed information on installing the sensor and commissioning the transmitter, see the associated documentation under www.endress.com/download.

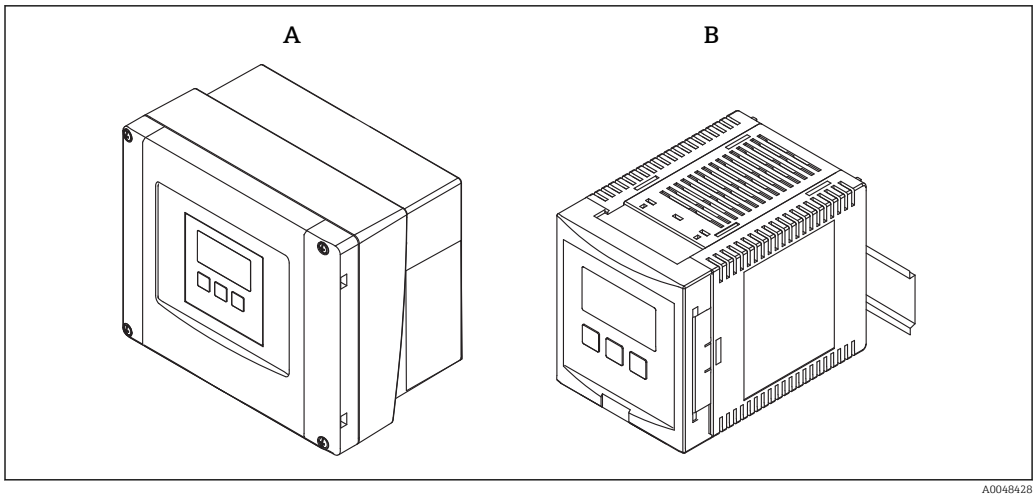

A FMU90 - in field housing
B FMU90 - DIN rail version

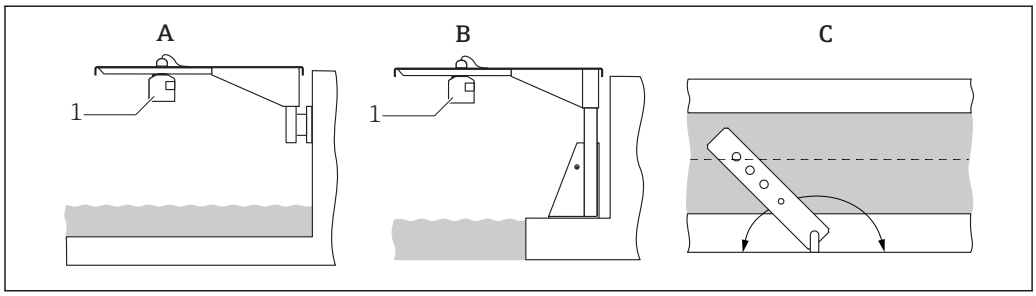

A Angle bracket with cantilever and wall bracket
B Angle bracket with cantilever and mounting frame
C The angle bracket can be pivoted to position the sensor over the center of the flume
1 Sensor

Process

- Expansion coefficient: $1.8 \cdot 10^{-4}$ / K
- Temperature range: 0 to 40 °C (32 to 104 °F)

Mechanical construction

Khafagi-Venturi flumes

The Khafagi-Venturi flume QV302 is supplied with a diffuser outlet. The flumes QV303 to QV316 are supplied without a diffuser. Khafagi-Venturi flumes with raised side walls enable the flow rate to be doubled while the channel width b_1 remains the same.

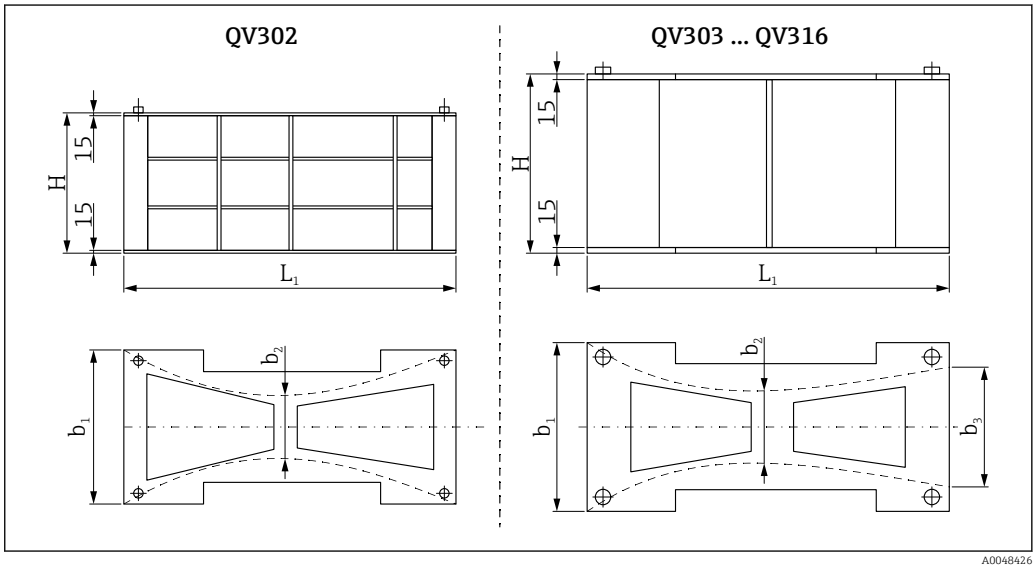

2 *Dimensions of Khafagi-Venturi flumes QV302 to QV316*

b_1 Inlet width
b_2 Constriction width
b_3 Outlet width
H Total height of flume
L_1 Flume length

Standard sizes (all dimensions in mm) for complete Khafagi-Venturi flumes (constriction ratio b_2:b_1 = 0.4)

	QV302	QV303	QV304	QV305	QV306
	011454-0002 011454-2002 [1]	011454-0003 011454-2003 [1]	011454-0004 011454-2004 [1]	011454-0005 011454-2005 [1]	011454-0006 011454-2006 [1]
Inlet width b_1	120	300	400	500	600
Constriction width b_2	48	120	160	200	240
Outlet width b_3	-	210	280	350	420
Flume length L1 Length to end of diffuser L	420 420	690 1050	920 1400	1150 1750	1380 2100
Total height of flume H	300	300	400	450	450
Total height with raised side walls H	400	400	500	600	650
Length of recess X [2]	520	710	940	1170	1400
Depth of recess Y [2]	15	15	15	15	15
Min. height of channel wall Z [2]	285	285	385	435	435
Min. height of channel wall Z with raised side walls [2]	385	385	485	585	635

1) Order number for the flume with higher side walls
2) → 🖹 7

Standard sizes (all dimensions in mm) for Khafagi-Venturi flumes (constriction ratio b_2:b_1 = 0.4)

	QV308	QV310	QV313	QV316
	011454-0008 011454-2008 [1]	011454-0010 011454-2010 [1]	011454-0013 011454-2013 [1]	011454-0016 011454-2016 [1]
Inlet width b1	800	1000	1300	1600
Constriction width b2	320	400	520	640
Outlet width b3	560	700	910	1120
Flume length L1 Length to end of diffuser L	1840 2800	2300 3500	3000 4550	3680 5600
Total height of flume H	670	870	1020	1320
Total height with raised side walls H	870	1200	1400	1800
Length of recess X [2]	1860	2330	3030	3710
Depth of recess Y [2]	15	15	15	15
Min. height of channel wall Z [2]	655	855	1005	1305
Min. height of channel wall Z with raised side walls [2]	855	1185	1385	1785

1) Order number for the flume with higher side walls
2) → 🖹 7

Khafagi-Venturi half-shells

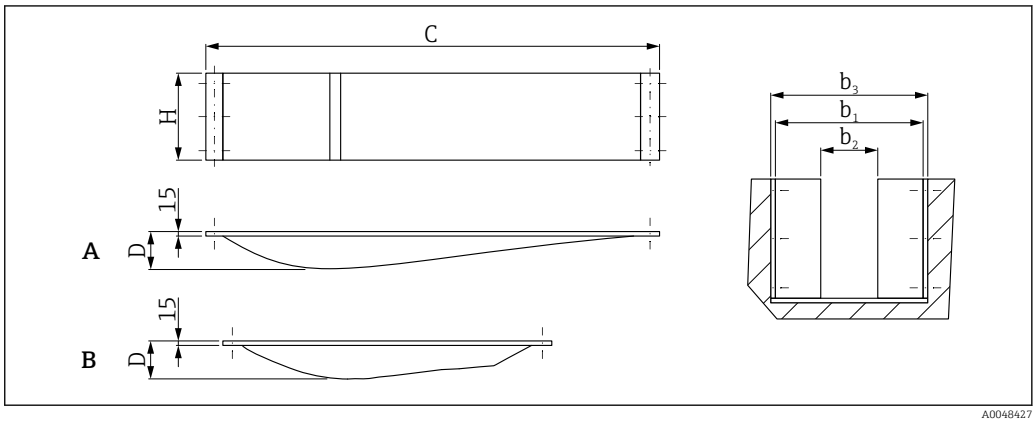

3 Dimensions of Khafagi-Venturi half-shells QV302 to QV316

A QV303 to QV310
B QV313 to QV316
b_1 Inlet width
b_2 Constriction width
b_3 Recess in basin
H Height
C Flume length
D Width of half-shell

Standard sizes (all dimensions in mm) for Khafagi-Venturi half-shells (constriction ratio b_2:b_1 = 0.4)

	QV302	QV303	QV304	QV305	QV306
	011454-1002 011454-3002 [1]	011454-1003 011454-3003 [1]	011454-1004 011454-3004 [1]	011454-1005 011454-3005 [1]	011454-1006 011454-3006 [1]
Flume length C	600	1250	1600	1950	2300
Height H	300	300	400	450	450
Height with raised side walls H1	400	400	500	600	650
Inlet width b_1	120	300	400	500	600
Constriction width b_2	48	120	160	200	240
Recess in basin b_3	150	330	430	530	630
Width of half-shell D	36	90	120	150	180

1) Order number for the half-shell with higher side walls

Standard sizes (all dimensions in mm) for complete Khafagi-Venturi half-shells (constriction ratio b_2:b_1 = 0.4)

	QV308	QV310	QV313	QV316
	011454-1008 011454-3008 [1]	011454-1010 011454-3010 [1]	011454-1013 011454-3013 [1]	011454-1016 011454-3016 [1]
Flume length C	3050	3200	4000	4800
Height H	670	870	1020	1320
Height with raised side walls H1	870	1200	1400	1800
Inlet width b_1	800	1000	1300	1600
Constriction width b_2	320	400	520	640
Recess in basin b_3	830	1030	1330	1630
Width of half-shell D	240	300	390	480

1) Order number for the half-shell with higher side walls

Materials Polypropylene (PP)

Supplementary documentation

Documentation for ultrasonic sensor Prosonic S FDU9x and ultrasonic transmitter FMU9x, see www.endress.com/download

71563553

www.addresses.endress.com

Endress+Hauser
People for Process Automation