# Round cylinders - Series 27

Product code: 27U2A20A0010

*Datasheet creation date: 19/05/2026 08:34*

*Check the most updated document online* *click here*





## TECHNICAL DATA

| | |
|---|---|
| **Series** | 27 |
| **Diameter (mm)** | 20 |
| **Version** | U = rear end block with radial connection |
| **Operation** | 2 = double - acting |
| **Materials** | A = rolled stainless steel |
| **Construction** | A = standard |
| **Stroke (mm)** | 10 |
| **Seal options** | = standard |
| **Rod length (mm)** | 0 |
| **Certifications** | = standard |

Products designed for industrial applications. General terms and conditions for sale are available on www.camozzi.com.
This document contains a brief description of the products offered by Camozzi Automation at time of publication.
For more complete and up to date information about the Camozzi Automation product range, please refer to our online catalogue at https://shop.camozzi.com

# Round cylinders - Series 27

Product code: 27U2A20A0010

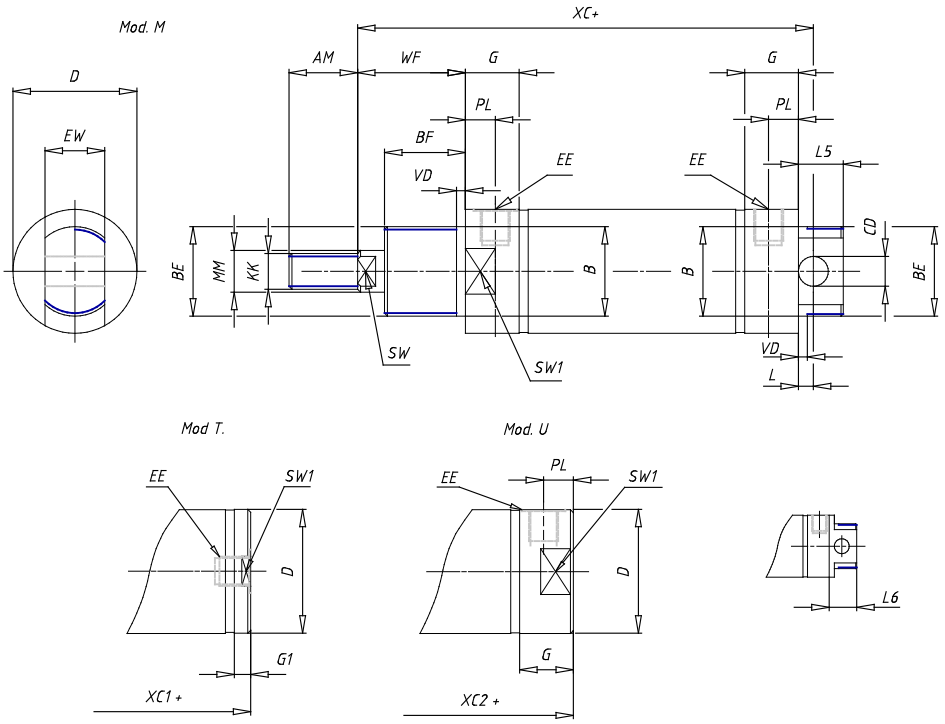


## DIMENSIONS

| | |
|---|---|
| **AM (mm)** | 14 |
| **Ø B (mm)** | 16 |
| **BF (mm)** | 12 |
| **BE** | M16x1.5 |
| **Ø CD (mm)** | 6 |
| **Ø D (mm)** | 21.5 |
| **EE** | G1/8 |
| **EW (mm)** | 12 |
| **G (mm)** | 15.5 |
| **G1 (mm)** | 8.0 |
| **KK** | M8x1.25 |
| **L (mm)** | 7 |
| **Ø MM (mm)** | 8 |
| **L5 (mm)** | 13 |
| **L6 (mm)** | 0 |
| **PL (mm)** | 9 |
| **SW (mm)** | 7 |
| **VD (mm)** | 3 |
| **WF (mm)** | 17.0 |
| **XC (mm)** | 77.0 |
| **XC1 (mm)** | 62.5 |
| **XC2 (mm)** | 70.8 |
| **SW1 (mm)** | 19 |

| | |
|---|---|
| **BG (mm)** | 0 |
| **BG1 (mm)** | 0.0 |
| **FB** | 0 |
| **RT** | 0 |
| **Ø RT1 (mm)** | 0 |
| **TC (mm)** | 0 |
| **TF (mm)** | 0.0 |

Products designed for industrial applications. General terms and conditions for sale are available on www.camozzi.com.
This document contains a brief description of the products offered by Camozzi Automation at time of publication.
For more complete and up to date information about the Camozzi Automation product range, please refer to our online catalogue at https://shop.camozzi.com