JUMO GmbH & Co. KG
Delivery address: Mackenrodtstraße 14,
36039 Fulda, Germany
Postal address: 36035 Fulda, Germany
Phone: +49 661 6003-0
Fax: +49 661 6003-607
e-mail: mail@jumo.net
Internet: www.jumo.net

JUMO Instrument Co. Ltd.
JUMO House
Temple Bank, Riverway
Harlow, Essex CM 20 2TT, UK
Phone: +44 1279 635533
Fax: +44 1279 635262
e-mail: sales@jumo.co.uk
Internet: www.jumo.co.uk

JUMO PROCESS CONTROL INC.
885 Fox Chase, Suite 103
Coatesville PA 19320, USA
Phone: 610-380-8002
1-800-554-JUMO
Fax: 610-380-8009
e-mail: info@JumoUSA.com
Internet: www.JumoUSA.com

JUMO iTRON 04/08/16/32
Compact microprocessor controllers

Housing for flush-panel mounting to DIN 43 700



JUMO iTRON 32
Type 702040



JUMO iTRON 16
Type 702041



JUMO iTRON 08
Type 702042



JUMO iTRON 08
Type 702043



JUMO iTRON 04
Type 702044

Brief description

The JUMO iTRON controller series comprises universal and freely programmable compact instruments for a variety of control tasks. It consists of five models, with the bezel sizes 96mm x 96mm, 96mm x 48mm in portrait and landscape format, 48mm x 48mm and 48mm x 24mm.
The controllers feature a clearly readable 7-segment display which, depending on the version, is 10 or 20 mm high, for process value and setpoint indication or for dialogs. Only three keys are needed for configuration. Parameter setting is arranged dynamically, and after two operation-free seconds the value is accepted automatically. Self-optimisation, which is provided as standard, establishes the optimum controller parameters by a key stroke. The basic version also includes a ramp function with adjustable gradients. A timer function has been integrated as an extra.
All controllers can be employed as single-setpoint controllers with a limit comparator, or as double-setpoint controllers. The linearisations of the usual transducers are stored. Protection is IP65 at the front and IP20 at the back. The electrical connection is by a plug-in connector with screw terminals.
The inputs and outputs are shown in the block structure below.

Block structure

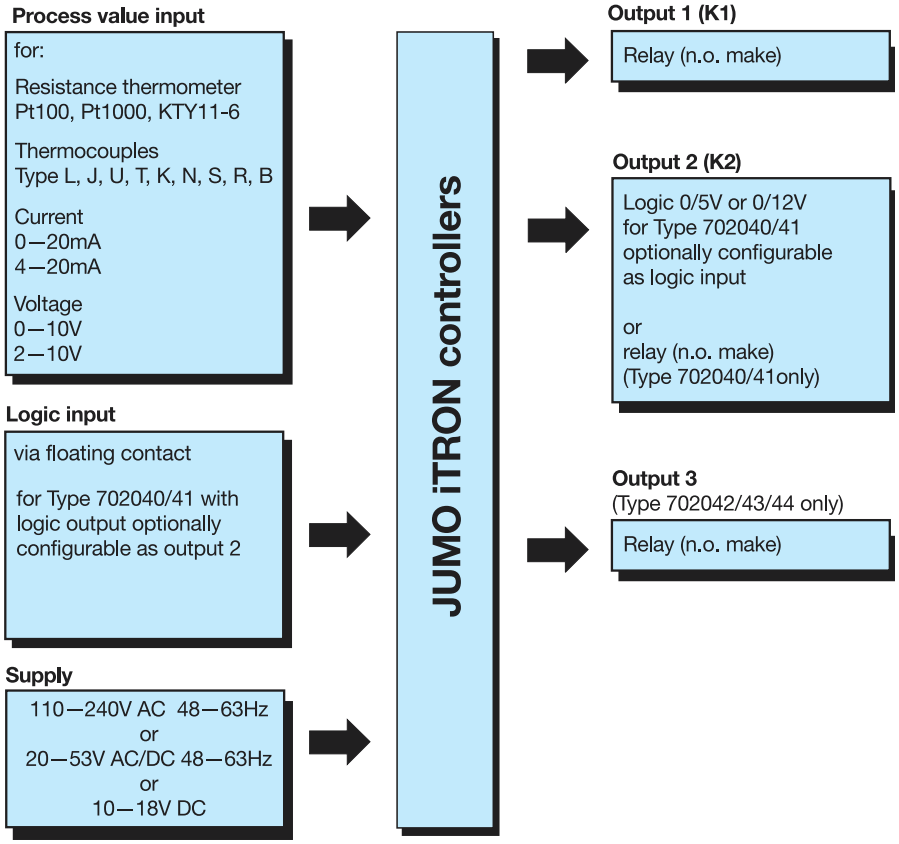

Features

- Structured operating and programming layout
- Self-optimisation
- Ramp function
- Timer function
- Digital input filter with programmable filter time constant
- 1 limit comparator
- limit switch

Technical data

Thermocouple input

Designation			Range [1]	Measurement accuracy	Ambient temperature error
Fe-Con	L		-200 to + 900°C	≤0.4%	100 ppm/°C
Fe-Con	J	EN 60 584	-200 to +1200°C	≤0.4%	100 ppm/°C
Cu-Con	U		-200 to + 600°C	≤0.4%	100 ppm/°C
Cu-Con	T	EN 60 584	-200 to + 400°C	≤0.4%	100 ppm/°C
NiCr-Ni	K	EN 60 584	-200 to +1372°C	≤0.4%	100 ppm/°C
NiCrSi-NiSi	N	EN 60 584	-200 to +1300°C	≤0.4%	100 ppm/°C
Pt10Rh-Pt	S	EN 60 584	0 — 1768°C	≤0.4%	100 ppm/°C
Pt13Rh-Pt	R	EN 60 584	0 — 1768°C	≤0.4%	100 ppm/°C
Pt30Rh-Pt6Rh	B	EN 60 584	0 — 1820 °C	≤0.4%	100 ppm/°C
Cold junction			Pt 100 internal		

1. These ranges refer to the ambient temperature of 20°C

Resistance thermometer input

Designation		Connection type	Range	Measurement accuracy	Ambient temperature error
Pt 100	EN 60 751	2-/3-wire	-200 to +850°C	≤0.1%	50 ppm/°C
Pt 1000	EN 60 751	2-/3-wire	-200 to +850°C	≤0.1%	50 ppm/°C
KTY11-6		2-wire	-50 to +150°C	≤1.0%	50 ppm/°C
Sensor lead resistance		20Ω max. per lead for 2- and 3-wire circuit			
Measurement current		250µA			
Lead compensation		Not required for 3-wire circuit. For 2-wire circuit, lead compensation can be implemented in software through process value correction.			

Standard signal input

Designation	Range	Measurement accuracy	Ambient temperature error
Voltage	0 — 10V, input resistance R_E > 100kΩ	≤0.1%	100 ppm/°C
	2 — 10V, input resistance R_E > 100kΩ	≤0.1%	100 ppm/°C
	0 — 1V, input resistance R_E > 10MΩ[1]	≤0.1%	100 ppm/°C
	0,2 — 1V, input resistance R_E > 10MΩ[1]	≤0.1%	100 ppm/°C
Current	4 — 20mA, voltage drop 3V max.	≤0.1%	100 ppm/°C
	0 — 20mA, voltage drop 3V max.	≤0.1%	100 ppm/°C

1. for Type 702040/41 with 2 relay outputs (option)

Measurement circuit monitoring[1]

Transducer		Overrange/ underrange	Probe /lead short-circuit[1]	Probe/lead break
Thermocouple		•	-	•
Resistance thermometer		•	•	•
Voltage	2—10V / 0.2—1V	•	•	•
	0—10V/ 0—1V	•	-	-
Current	4—20mA	•	•	•
	0—20mA	•	-	-

1. In the event of a fault, the outputs move to a defined status (configurable).

= factory setting • recognised - not recognised

Outputs

Assignment	Type 702040/41	Type 702042/43/44
Output 1	relay	relay
Output 2	logic 0/5V or logic input	logic 0/5V
Output 2 (option)	logic 0/12V or logic input	logic 0/12V
Output 2 (option)	relay	not possible
Output 3	not available	relay
Technical data		
Relay rating contact life	n.o. (make) contact 3A at 250VAC resistive load 150 000 operations at rated load	
Logic current limiting load resistance	0/5V 20mA R_{load} 250Ω min.	
Logic current limiting load resistance	0/12V 20mA R_{load} 600Ω min.	

= factory setting

Controller

Controller type	single-setpoint controller with limit comparator, double-setpoint controller
Controller structures	P/PD/PI/PID
A/D converter	resolution better than 15 bit
Sampling time	210msec/250msec with activated timer function

Timer

Accuracy	0.7% ± 10ppm/°C

Electrical data

Supply (switch-mode power supply)	110 — 240V -15/+10% AC 48 — 63Hz, or 20 — 53V AC/DC 48 — 63Hz, or 10 — 18V DC (Connection to SELV or PELV)
Test voltages (type test)	to EN 61 010, Part 1, March 1994, overvoltage category II, pollution degree 2, for Type 702040/41 overvoltage category III, pollution degree 2, for Type 702042/43/44
Power consumption	max. 7VA
Data backup	EEPROM
Electrical connection	at the rear, via plug-in screw terminals, conductor cross-section up to 1.5mm² (1.0mm² for Type 702040/41) or 2x 1.5mm² (1.0mm² for Type 702040/41) with ferrules
Electromagnetic compatibility interference emission interference immunity	EN 61 326 Class B to industrial requirements
Safety regulation	to EN 61 010-1

Housing

Housing type	plastic housing for flush-panel mounting to DIN 43 700				
Dimensions in mm (for Type)	702040	702041	702042	702043	702044
Bezel size	48 x 24	48 x 48	48 x 96 (portrait)	96 x 48 (landscape)	96 x 96
Depth behind panel	100	100	70	70	70
Panel cut-out	$45^{+0.6}$ x $22.2^{+0.3}$	$45^{+0.6}$ x $45^{+0.6}$	$45^{+0.6}$ x $92^{+0.8}$	$92^{+0.8}$ x $45^{+0.6}$	$92^{+0.8}$ x $92^{+0.8}$
Ambient/storage temperature range	0 — 55°C / -40 to +70°C				
Climatic conditions	not exceeding 75% rel. humidity, no condensation				
Operating position	unrestricted				
Protection	to EN 60 529, IP65 at the front, IP20 at the back				
Weight	75g approx.	95g approx.	145g approx.	160g approx.	200g approx.

Display and controls

(1) Display	7-segment display, 4 places, green Display alternates when setpoints, parameters and codes are indicated and entered. 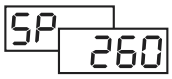	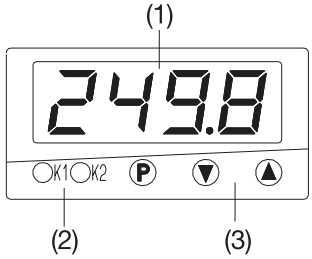
Character height	Type 702040/41/42: 10 mm, Type 702043/44: 20 mm	
Display range/unit	-1999 to +9999 digit / °C/°F	
Decimal places	none, one, two	
(2) Status indication	two LEDs for the outputs 1 and 2, yellow	
(3) Keys	for operating and programming the instrument. Dynamic modification of settings and parameters via the ▲ and ▼ keys. Automatic value acceptance after 2 seconds.	

Example: Type 702040

Self-optimisation (SO)

The standard self-optimisation facility produces an automatic adjustment of the controller to the process.
Self-optimisation determines the controller parameters for PI and PID controllers (proportional band, reset time, derivative time), as well as the cycle time and the filter time constant of the digital input filter.

Ramp function

The ramp function enables a defined approach of the process value from t_0 to the preset setpoint SP. The slope is set via a gradient (°C/min or °C/h) at the parameter level. On a change of setpoint, it will be active either as a falling or rising ramp.	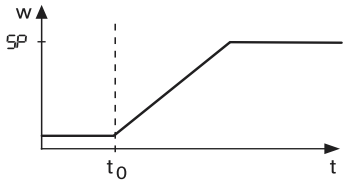	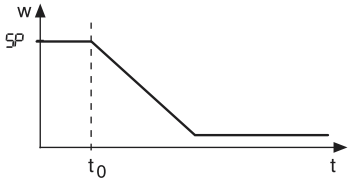

Limit comparator

Function lk1 Window function: Output is active (On) when the process value is within a certain range (window) about the setpoint. **Function lk2** as lk1, but signal function reversed.	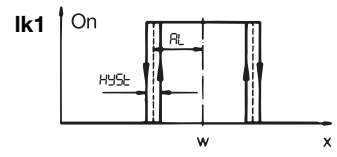	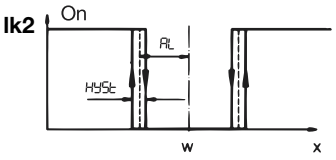
Function lk3 low alarm Function: output is inactive, when the process value is below (setpoint - limit value) **Function lk4** as lk3, but reversed signal function	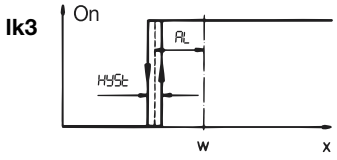	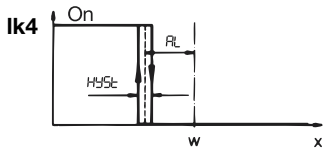
Function lk5 high alarm Function: output is inactive when the process value is above (setpoint + limit value) **Function lk6** as lk5, but reversed signal function.	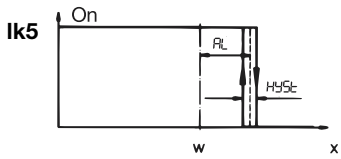	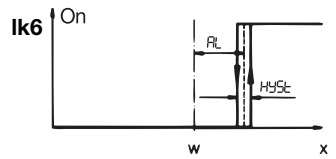
Function lk7 Switching point is independent of the controller setpoint; only AL determines the switching point. Function: Output is active when the process value is above the limit value. **Function lk8** as lk7, but reversed signal function.	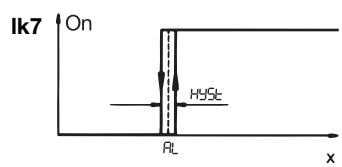	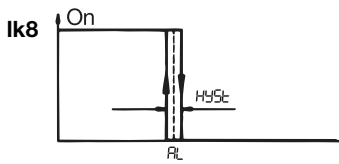

Limit switch (extra code)

If the limit comparator function is active, then the switched state will have to be reset by hand.
Precondition: the condition that caused the alarm is no longer present (for lk8: process value < AL). The display shows the alarm status.
The alarm status will be retained after a power failure.

Timer function (extra code)

Using the timer function, the control action can be influenced by means of the adjustable time t. 0. After the timer has been started by power ON, by pressing the key or via the logic input, the timer start value t.0 is counted down to 0, either instantly or after the process value has gone above or below a programmable tolerance limit. When the timer has run down, several events are triggered, such as control switch-off (output 0%) and setpoint switching. Furthermore, it is possible to implement timer signalling during or after the timer count, via an output.
The timer function can be used in conjunction with the ramp function and setpoint switching.

Table: Timer functions (using the example of a reversed single-setpoint controller)

Function	Start condition: Power ON	Start condition: Keypad/logic input	Start condition: Tolerance limit
Time-limited control The control action is switched off after the timer has run down (output 0%)	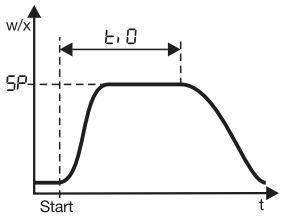		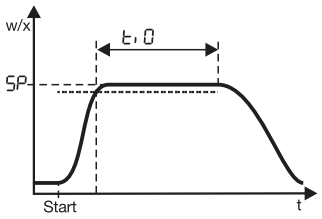
Time-dependent setpoint switching After the timer has been started, the process is controlled to setpoint SP2. After the timer has run down, the controller automatically switches over to SP 1	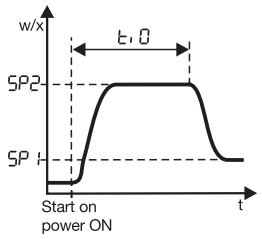	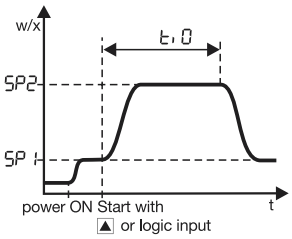	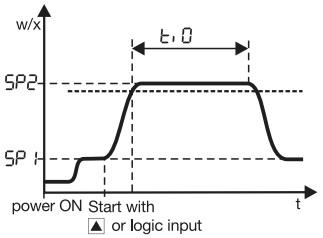
Time-delayed control The control action starts after the timer has run down.	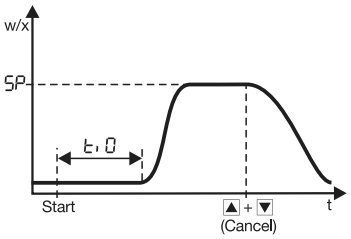		———
Timer with signalling After the timer has been started, t. 0 is counted down to 0. The control action is independent of the timer. With this timer function, too, the end of the timer count-down can also be signalled via an output.	Signalling after timer count-down (e.g. C122=3) 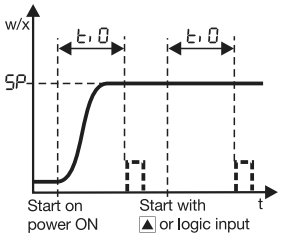	Signalling from start to end of timing 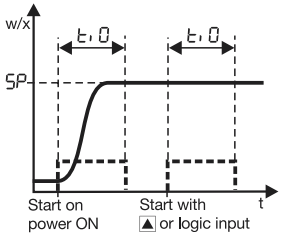	———

Tolerance limit

The position of the tolerance limit depends on the controller type:
- Single-setpoint controller (reversed, heating): Tolerance limit is below the setpoint
- Single-setpoint controller (direct, cooling): Tolerance limit is above the setpoint
- Double-setpoint controller: Tolerance limit is below the setpoint

If, during the control process, the process value goes above/below the tolerance limit, then the timer will be stopped for the duration of the infringement.

Display and operation

The timer value is displayed at the operating level and remains so permanently (no time-out).
Operation is from the keypad, when the timer value is visible in the display, or via the logic input. The operating options comprise start, stop, continue and cancel timer function, and are shown differently in the display.
The current timer value and the timer start value are accessible and adjustable at any time at a separate timer level.

Parameter and configuration

Operating level

Designation	Display	Factory setting	Value range
Setpoint	SP/SP 1/SP2	0	SPL—SPH
Ramp setpoint	SPr	0	SPL—SPH
Timer value/timer start value	t1 /t1 0	0	0 —999.9h

Parameter level

Designation	Display	Factory setting	Value range
Setpoint 1	SP 1	0	SPL—SPH
Setpoint 2	SP 2	0	SPL—SPH
Limit value for limit comparator	AL	0	-1999 to +9999 digit
Proportional band 1	Pb.1	0	0 — 9999 digit
Proportional band 2	Pb.2	0	0 — 9999 digit
Derivative time	dt	80sec	0 — 9999 sec
Reset time	rt	350sec	0 — 9999 sec
Cycle time 1	CY 1	20.0sec	1.0 — 999.9 sec
Cycle time 2	CY 2	20.0sec	1.0 — 999.9 sec
Contact spacing	db	0	0 — 1000 digit
Differential (hysteresis) 1	HYS.1	1	0 — 9999 digit
Differential (hysteresis) 2	HYS.2	1	0 — 9999 digit
Working point	Y.0	0%	-100 to +100 %
Maximum output	Y.1	100%	0 to 100 %
Minimum output	Y.2	-100%	-100 to +100 %
Filter time constant	dF	0.6sec	0.0 — 100.0 sec
Ramp slope	rASd	0	0 — 999 digit

Configuration level

Designation	Display	Factory setting	Value range/selection
Transducer	C111	Pt100	Pt100, Pt1000, KTY11-6, T, J, U, L, K, S, R, B, N, 0 (4)—20 mA, 0 (2)—10V
Decimal place/unit	C112	none/°C	none, one, two/°C, F
Controller type/outputs	C113	see table on next page	
Limit comparator function	C114	no function	no function, lk1—8
Ramp function	C115	no function	no function, °C/min, °C/h
Output signal on overrange/ underrange	C116	0% output limit comparator off	0%, 100%, -100% limit comparator on/off
Logic input	C117	no function	key / level inhibit, ramp stop, setpoint switching
Outputs 1, 2 and 3 (only Type 702042/43/44)	C118	functions as defined under C113	freely configurable (see table on next page)
Timer function	C120	no function	see description “Timer function”
Start condition for timer	C121	from keypad/ logic input	- power ON - keypad/logic input - tolerance limit
Timer signalling	C122	no function	- timer start to timer run-down - after run-down for 10sec - after run-down for 1 min. - after run-down until acknowledgement
Unit of time (timer)	C123	mm.ss	- mm.ss - hh.mm - hhh.h
Start value of value range	SCL	0	-1999 to +9999 digit
End value of value range	SCH	100	-1999 to +9999 digit
Lower setpoint limit	SPL	-200	-1999 to +9999 digit
Upper sepoint limit	SPH	850	-1999 to +9999 digit
Process value correction	OFFS	0	-1999 to +9999 digit
Differential (hysteresis)	HYSt	1	0—9999 digit

Controller type/outputs (C 113)

Controller type	Output 1	Output 2 + 3
Single setpoint reversed	controller	limit comparator/timer signalling
Single setpoint direct	controller	limit comparator/timer signalling
Double setpoint	controller reversed	controller direct
Single setpoint reversed	limit comparator/timer signalling	controller
Single setpoint direct	limit comparator/timer signalling	controller
Double setpoint	controller direct	controller reversed

= factory setting

Expanded configuration options for the outputs on Type 702043/44 (C118)

	Output 1: Relay (K1)	Output 2: Logic (K2)	Output 3: Relay
1-setpoint controller	Functions of the outputs as defined under C 113		
	controller output	limit comparator	timer signalling
	controller output	timer signalling	limit comparator
	limit comparator	controller output	timer signalling
	limit comparator	timer signalling	controller output
	timer signalling	controller output	limit comparator
	timer signalling	limit comparator	controller output
2-setpt. controller	controller output 1	controller output 2	limit comparator/timer
	controller output 1	limit comparator/timer	controller output 2
	controller output 2	controller output 1	limit comparator/timer
	controller output 2	limit comparator/timer	controller output 1
	limit comparator/timer	controller output 1	controller output 2
	limit comparator/timer	controller output 2	controller output 1

Dimensions

Type 702040 / ...

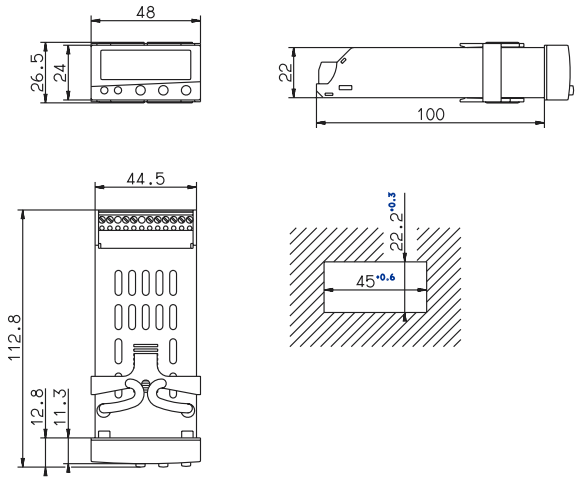

Type 702041 / ...

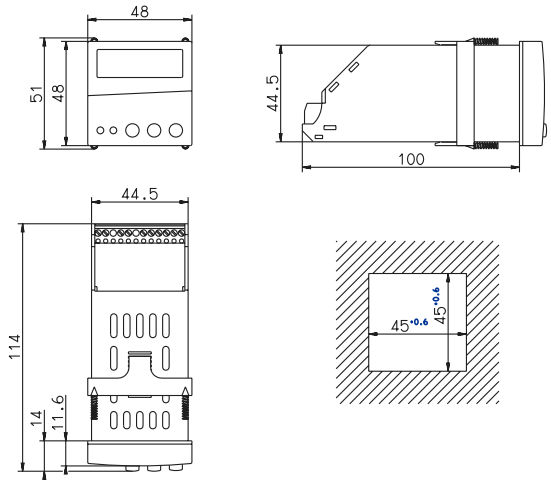

Type 702042 / ...

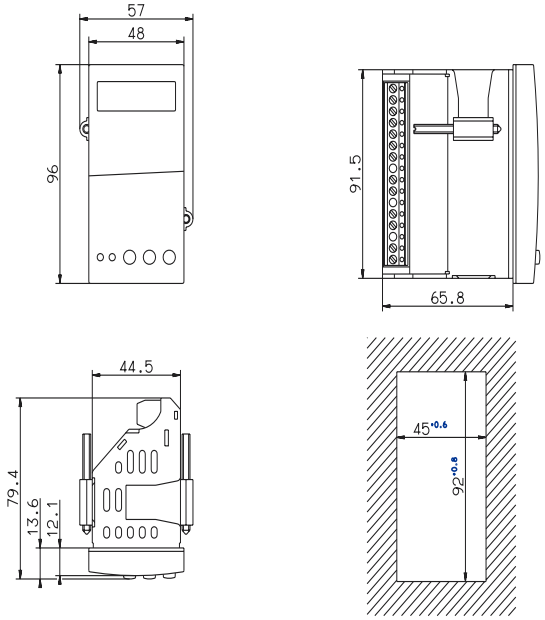

Type 702043/...

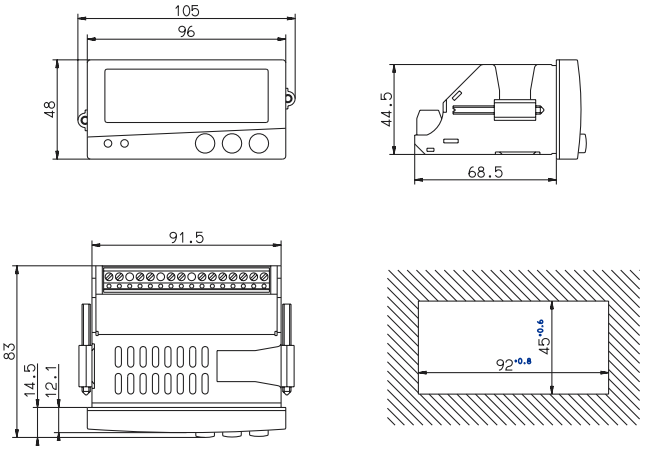

Type 702044/...

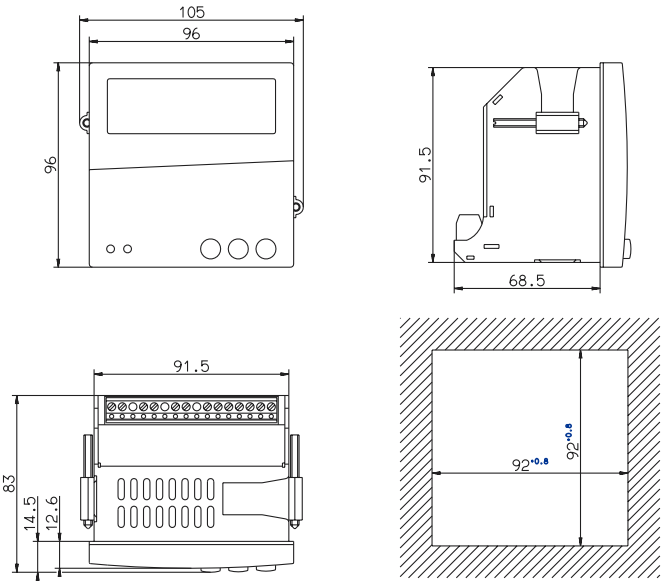

Edge-to-edge mounting
(minimum spacings of the panel cut-outs)

Type	horizontal	vertical
70.2040/41	8mm min.	8mm min.
70.2042/43/44	10mm min.	10mm min.

Connection diagrams

JUMO iTRON 32, Type 702040, 48mm x 24mm format
JUMO iTRON 16, Type 702041, 48mm x 48mm format

Standard version / Version with 12V logic output

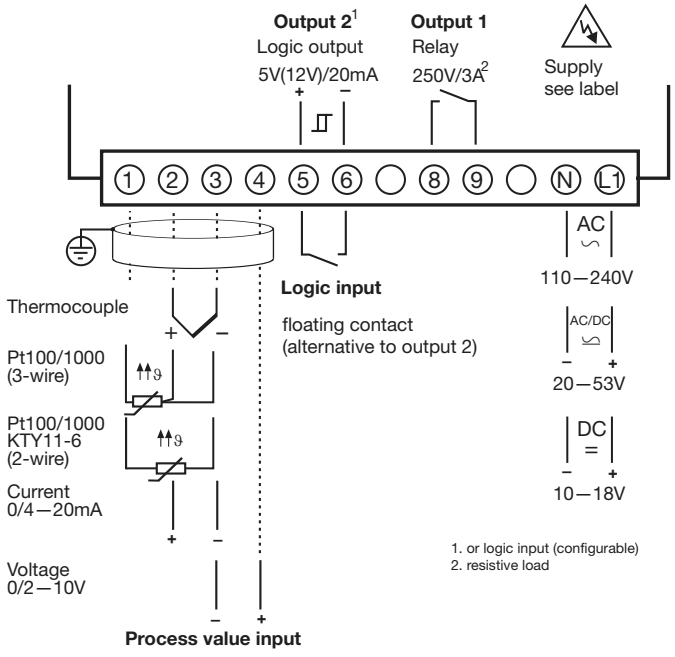

Version with 2 relay outputs

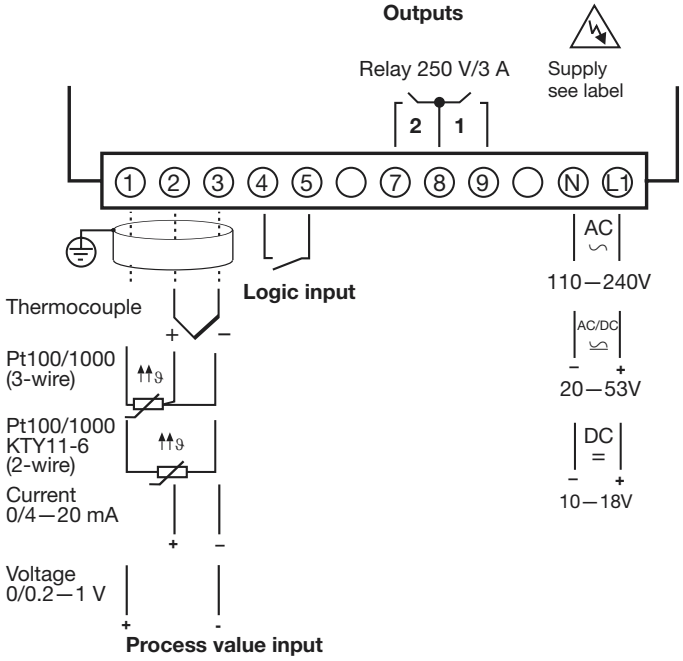

JUMO iTRON 08, Type 702042, 48mm x 96mm format (portrait)
JUMO iTRON 08, Type 702043. 96mm x 48mm format (landscape)
JUMO iTRON 04, Type 702044, 96mm x 96mm format

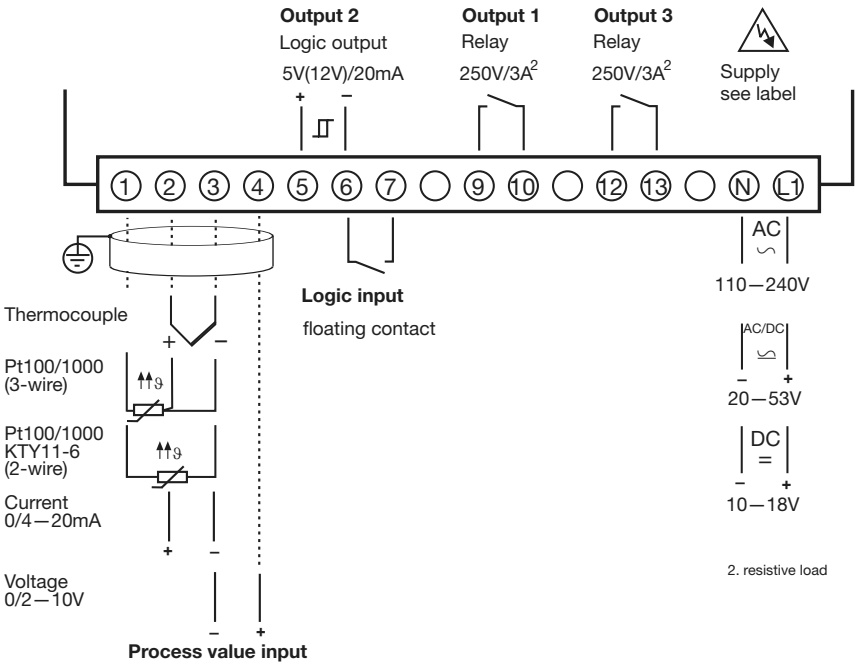

Order details

Type designation

	(1)		(2)		(3)		(4)		(5)		(6)	
7020	. .	/	. .	-	. . .	-	. . .	-	. .	/	. . .	, ...*

* List extra codes in sequence, separated by commas

(1) Basic type (bezel size in mm)	**40** = 48 x 24, **41** = 48 x 48, **42** = 48 x 96 (portrait), **43** = 96 x 48 (landscape), **44** = 96 x 96			
(2) Basic type extension	**88** = controller type configurable[1] **99** = controller type configured to customer specification[2]			
(3) Inputs	**888** = inputs configurable[1] **999** = inputs configured to customer specification[2]			
(4) Outputs	**000 =**	Standard	Type 702040/41	Type 702042/43/44
		Output 1	relay (n.o. make)	relay (n.o. make)
		Output 2	logic 0/5V, optionally configurable as logic input	logic 0/5V
		Output 3	not available	relay (n.o. make)
		Options	Type 702040/41	Type 702042/43/44
	113 =	Output 2 (outputs 1+3 as for Standard)	logic 0/12V, optionally configurable as logic input	logic 0/12V
	101 =	Output 2 (output 1 as for Standard)	relay (n.o. make) (logic input is always available)	not possible
(5) Supply	**16** = 10—18V DC **22** = 20—53V AC/DC 48—63Hz **23** = 110—240V AC -15/+10% 48—63Hz			
(6) Extra code	**069** = UL and CSA approval **210** = Timer function **220** = Timer function + limit switch[3]			
Delivery package		ex-factory for	Type 702040/41	Type 702042/43/44
			1 mounting frame	2 mounting brackets
			1 seal, 1 Operating Instructions 70.2040	

1. single-setpoint with limit comparator, see factory settings under configuration and parameter level
2. see extra order codes (below) or factory settings under configuration and parameter level
3. The linearizations for KTY11-6 and thermocouple B have been deleted

Extra order codes for customized configuration

(2) Basic type extension

		Controller type	Output 1	Output 2 and 3
10	=	single setpoint reversed[1]	controller	limit comparator/timer signalling
11	=	single setpoint direct[2]	controller	limit comparator/timer signalling
30	=	double setpoint	controller reversed	controller direct
20	=	single setpoint reversed[1]	limit comparator/timer signalling	controller
21	=	single setpoint direct [2]	limit comparator/timer signalling	controller
33	=	double setpoint	controller direct	controller reversed

1. controller output is active when process value is below setpoint, e. g. heating
2. controller output is active when process value is above setpoint, e. g. cooling

(3) Inputs

001	=	Pt100	3-wire	040	=	Fe-Con	J	045	=	Pt13 Rh-Pt	R	063	=	0—10V
003	=	Pt100	2-wire	041	=	Cu-Con	U	046	=	Pt30 Rh-PtRh	B	071	=	2—10V
005	=	Pt1000	2-wire	042	=	Fe-Con	L	048	=	NiCrSi-NiSi	N	601	=	KTY11-6 (PTC)
006	=	Pt1000	3-wire	043	=	NiCr-Ni	K	052	=	0—20mA				
039	=	Cu-Con T		044	=	Pt10Rh-Pt	S	053	=	4—20mA				

= factory-set

Stock versions

⇨ Price Sheet