



Dimensions

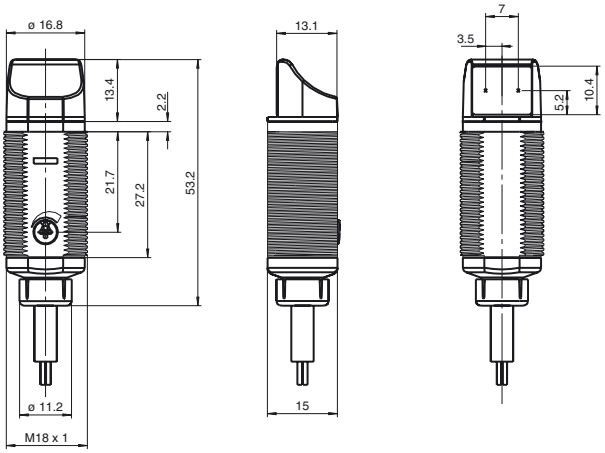



Model Number

GLV18-8-400-S/25/102/115

Energetic diffuse mode sensor
with 2 m fixed cable

Features

- Short design in M18 plastic housing
- Optical face lateral
- 4 LEDs indicator for 360° all-round visibility
- Optimal price/power ratio

Electrical connection

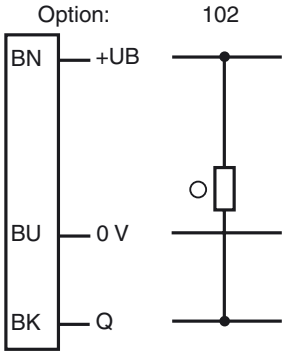

○ = Light on
● = Dark on

Release date: 2008-01-30 Date of issue: 2008-01-30 190550_ENG.xml

Subject to reasonable modifications due to technical advances.
Copyright Pepperl+Fuchs, Printed in Germany

Technical data

General specifications		
Detection range		50 ... 400 mm adjustable
Detection range max.		0 ... 400 mm
Light source		LED, red 640 nm
Approvals		CE, cULus Listed 57M3 (Only in association with UL Class 2 power supply)
Reference target		100 mm x 100 mm Kodak white
Light type		red, modulated light
Diameter of the light spot		approx. 30 mm at 400 mm
Angle of divergence		approx. 4 °
Optical face		lateral
Ambient light limit		30000 Lux
Hysteresis	H	< 15 %
Indicators/operating means		
Operating display		green LED, statically lit Power on
Function display		LED yellow: lights when object is detected ; flashes when falling short of the stability control
Operating elements		sensitivity adjuster
Electrical specifications		
Operating voltage		10 ... 30 V DC
Protection class		II, rated insulation voltage ¡Ü 250 V AC with degree of pollution 1-2 according to IEC 60664-1
No-load supply current	I_0	< 20 mA
Output		
Switching type		light ON
Signal output		1 npn, short-circuit proof, open collector
Switching voltage		max. 30 V DC
Switching current		max. 100 mA
Voltage drop	U_d	≤ 1.5 V DC
Switching frequency	f	500 Hz
Response time		≤ 1 ms
Standard conformity		
Standards		EN 60947-5-2
Ambient conditions		
Ambient temperature		-25 ... 60 °C (248 ... 333 K)
Storage temperature		-40 ... 70 °C (233 ... 343 K)
Mechanical specifications		
Protection degree		IP67
Connection		fixed cable 2 m
Material		
Housing		PC
Optical face		PMMA
Mass		< 100 g

Characteristic response curve

GLV18-8-400-S...

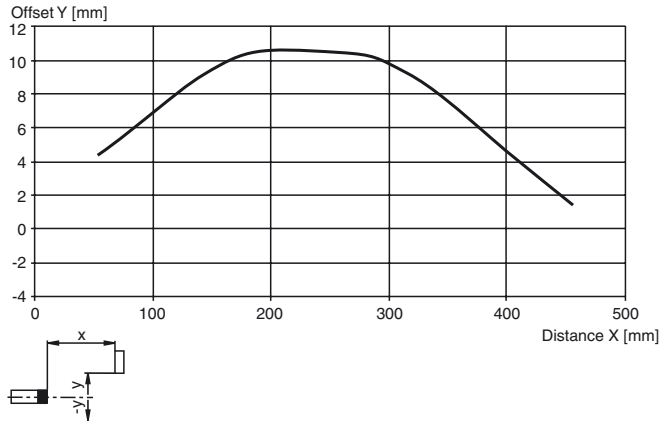

Release date: 2008-01-30 Date of issue: 2008-01-30 190550_ENG.xml

Subject to reasonable modifications due to technical advances. Copyright Pepperl+Fuchs, Printed in Germany
Pepperl+Fuchs Group • Tel.: Germany +49 621 776-0 • USA +1 330 4253555 • Singapore +65 67799091 • Internet http://www.pepperl-fuchs.com