EN

Professionally approved products.

Gate Valves

150S-300WOG Globe Valve Screwed Ends



RS Stock No. 511-5040

Design features:

1. Heavy bronze construction for quality and dependability
2. Screw over bonnet for extra strength
3. Heavy cast iron star handle for ease of use and strength
4. Full port for maximum flow rate
5. ¼”-3”meets mss sp-80 specification

Resistant

NSF61 APPROVED

Professionally approved products.

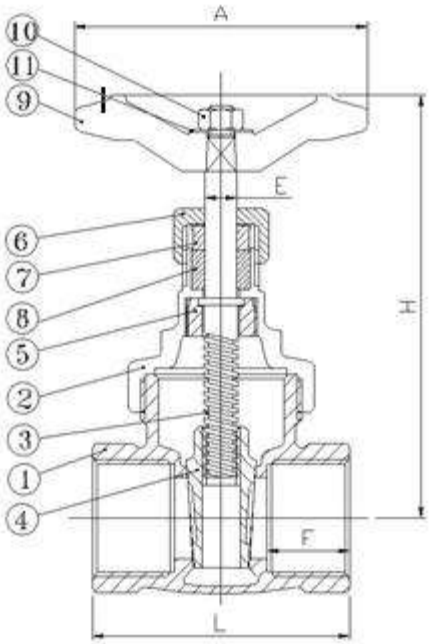

Size		L	H	A	E	F
¼"	in	1.59	3.15	1.75	0.29	0.40
	mm	40.39	80.01	44.45	7.37	10.16
⅜"	in	1.63	3.15	1.75	0.29	0.42
	mm	41.4	80.01	44.45	7.37	10.67
½"	in	1.92	3.35	2.00	0.31	0.54
	mm	48.77	85.09	50.8	7.87	13.72
¾"	in	1.98	3.65	2.50	0.35	0.57
	mm	50.29	92.71	63.5	8.89	14.48
1"	in	2.30	4.33	2.62	0.40	0.70
	mm	58.42	109.98	66.55	10.16	17.78
1¼"	in	2.57	4.92	3.00	0.43	0.72
	mm	65.28	124.97	76.2	10.92	18.29
1½"	in	2.78	5.39	3.50	0.48	0.76
	mm	70.61	136.91	88.9	12.19	19.3
2"	in	2.95	6.38	4.00	0.53	0.80
	mm	74.93	162.05	101.6	13.46	20.32
2½"	in	3.74	8.31	4.62	0.59	1.18
	mm	95	211.07	117.35	14.99	29.97
3"	in	4.01	9.17	5.00	0.67	1.22
	mm	101.85	232.92	127	17.02	30.99

MATERIAL LIST

NO.	NOMENCLATUR	BRONZE	LEAD FREE
1.	BODY	ASTM B62 C83600	ASTM C87850 or C89833
2.	BONNET	ASTM B62 C83600	ASTM C87850 or C89833
3.	STEM	ASTM B21 C46400 or DZR BRASS	ASTM C69300
4.	DISC	ASTM B62 C83600	ASTM C87850 or C89833
5.	LOCK NUT	ASTM B16 C36000 or DZR BRASS	ASTM C69300
6.	PACKING NUT	ASTM B16 C36000 or DZR BRASS	ASTM C69300
7.	GLAND	ASTM B16 C36000 or DZR BRASS	ASTM C69300
8.	GLAND PACKING	PTFE	PTFE
9.	HANDWHEEL	CAST IRON	CAST IRON
10.	WHEEL NUT	STEEL	STEEL
11.	NAME PLATE	ALUMINUM PLATE	ALUMINUM PLATE