PRODUCT DATASHEET
PL COMP 600 V 33W 840

PANEL COMPACT 600 | Square recessed panel luminaires, for 600 x 600 mm ceiling systems

VALUE CLASS

Areas of application

- Direct replacement for luminaires with fluorescent lamps
- Offices, conference rooms
- Reception areas, foyers, corridors, elevators
- Suitable for recessed ceiling systems with grid size of 600 x 600 mm

Product benefits

- Low flicker light thanks to special electronic control gear
- Energy savings thanks to system efficacy of up to 110 lm/W
- External driver with an optional 3-pole through-wiring feature
- Versions with DALI ECG available
- 5 years guarantee

Product features

- Extruded aluminum frame
- Polystyrene diffuser
- Lifetime (L80/B10): up to 50,000 h (at 25 °C)

© 2024, LEDVANCE GmbH. All rights reserved.

TECHNICAL DATA

Electrical data

Nominal wattage	33.00 W
Nominal voltage	220…240 V
Mains frequency	50…60 Hz
Nominal current	150.000 mA
Inrush current	12.3 A
Inrush current time T_{h50}	52 µs
Max. number of luminaires per miniature circuit breaker B16	61
Max. number of luminaires per miniature circuit breaker C10	48
Max. number of luminaires per miniature circuit breaker C16	78
Power factor λ	> 0.90
Total harmonic distortion	< 10 %
Protection class	II
Operating mode	External LED driver

Photometrical data

Luminous flux	3630 lm
Luminous efficacy	110 lm/W
Color temperature	4000 K
Light color (designation)	Cool White
Color rendering index Ra	> 80
Standard deviation of color matching	≤5 sdcm
Low flicker	Yes
Flickering metric (Pst LM)	<1
Stroboscope effect metric (SVM)	< 0.4
Photobiological safety group acc. to EN62778	RG0
Beam angle	120 °

© 2024, LEDVANCE GmbH. All rights reserved.

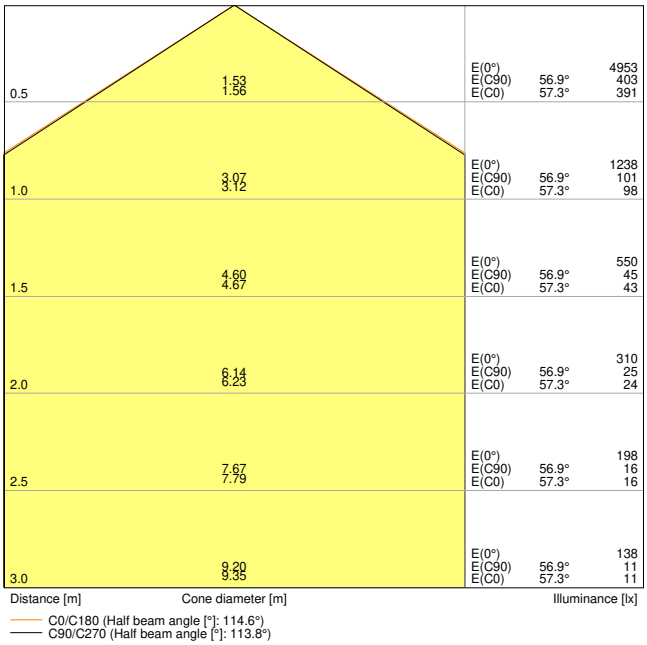

LDC typ cone

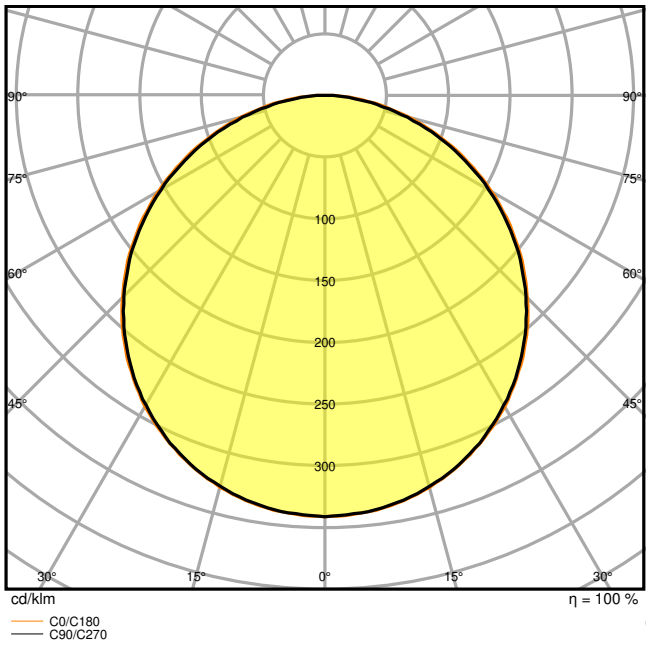

LDC typ polar

Dimensions & Weight

Length	595.00 mm
Width	595.00 mm
Height	32.00 mm
Product weight	1543.00 g

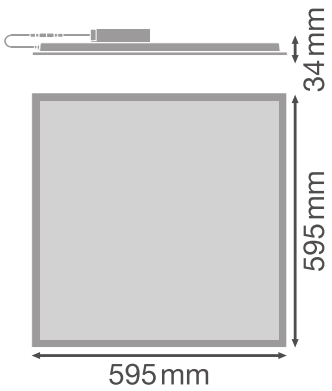

© 2024, LEDVANCE GmbH. All rights reserved.

Materials & Colors

Product color	White
Housing color	White
Body material	Aluminum
Cover material	Polystyrene (PS)
Light emitting surface material	Polystyrene
Glow Wire Test according to IEC 60695-2-12	650 °C
Mercury content	0.0 mg

Application & Mounting

Ambient temperature range	-10…+45 °C
Temperature range at storage	-20…+70 °C
Type of connection	Screwless terminal, 2-Pole (L, N)
Type of protection	IP40/IP20
Protection class IK (shock resistance)	IK02
Dimmable	No
Mounting type	Recessed/Suspended/Surface
Mounting location	Ceiling
Application environment	Indoor
Mounting length	575 mm
Mounting width	575 mm
Mounting depth	50,0 mm
Adjustable	No
LED module replaceable	Not replaceable
With light source	Yes

Lifespan

Lifespan L70/B50 at 25 °C	70000 h [1)]
Lifespan L80/B10 at 25 °C	50000 h [1)]
Lifespan L90/B10 at 25 °C	40000 h
Number of switching cycles	50000

1) t[h]: L70 / B50 @ 25 °C (Ta), t[h]: L80 / B10 @ 25 °C (Ta), t[h]: L90 / B10 @ 25 °C (Ta)

Control gear

Output current	700 mA
ECG - Output ripple current	< 7 %

© 2024, LEDVANCE GmbH. All rights reserved.

ECG - Length	116.7 mm
ECG - Width	49.9 mm
ECG - Height	27 mm
Recommended control gear	LEDV DR DALI-P-44/220-240/1050

Certificates & Standards

Standards	CE / CB / TÜV / UKCA / EAC
Luminaire with limited surface temperature, "D sign"	No
Ball shot safe	No

EQUIPMENT / ACCESSORIES

- Accessories for several mounting options available
- Security rope for luminaire included
- Security brackets preinstalled
- External control gear included
- Suitable for use with seperate Emergency Conversion Box

DOWNLOAD DATA

	Documents and certificates
PDF	User instruction
PDF	Addon Technical Information
PDF	Declarations Of Conformity CE
PDF	Declarations Of Conformity UKCA

	Photometric and lighting design files
IES	IES file (IES)
LDT	LDT file (Eulumdat)
ULD	ULD file (DIALux)
ROLF	ROLF file (RELUX)

© 2024, LEDVANCE GmbH. All rights reserved.

	Photometric and lighting design files
	UGR file (UGR table)
	LDC typ cone
	LDC typ polar

	CAD/BIM files
	BIM_Revit_3D
	CAD_STEP_3D

	Tender texts
	Tender documents

LOGISTICAL DATA

Product code	Packaging unit (Pieces/Unit)	Dimensions (length x width x height)	Gross weight	Volume
4099854017902	Folding box 1	602 mm x 37 mm x 662 mm	1973.00 g	14.75 dm^3
4099854017919	Shipping box 4	677 mm x 164 mm x 628 mm	8802.00 g	69.73 dm^3

The mentioned product code describes the smallest quantity unit which can be ordered. One shipping unit can contain one or more single products. When placing an order, for the quantity please enter single or multiples of a shipping unit.

ADDITIONAL CATALOG INFORMATION

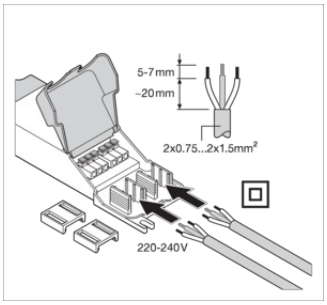

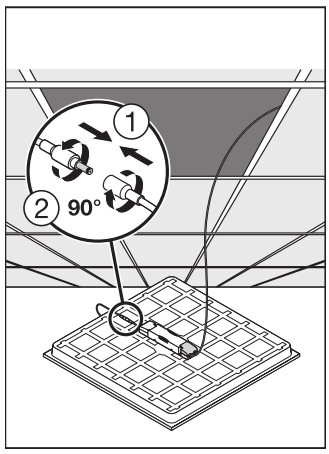

References / Links

© 2024, LEDVANCE GmbH. All rights reserved.

– For Guarantee see www.ledvance.com/guarantee

DISCLAIMER

Subject to change without notice. Errors and omission excepted. Always make sure to use the most recent release.

© 2024, LEDVANCE GmbH. All rights reserved.