VEO

MONITORING RELAY / 1-PHASE VOLTAGE

V2UM230V10

Art.Nr.: 2100300

V2UM230V10P

Art.Nr.: 2100310

- AC/DC voltage monitoring
- Multifunction
- Supply voltage 24 V DC or 230V AC/DC
- Supply circuit = Measuring circuit
- 1 change-over contact
- Width 22,5 mm

Control elements

- Tripping delay
- Maximum threshold
- Minimum threshold
- Function selector

Status indication

- LED U: Supply voltage
- LED Max: Overvoltage
- LED Min: Undervoltage
- LED R: Relay status



TECHNICAL DATA

SUPPLY CIRCUIT (=MEASURING CIRCUIT)		
Terminals		E-F1-F2
Supply voltage	F1-E	24 V DC
	F2-E	230 V AC/DC
Supply voltage tolerance	24 V DC	-30 / +30%
	230 V AC/DC	-30 / +20%
Rated frequency		16,6 ... 400 Hz or DC
Rated frequency tolerance		16,0 ... 420 Hz
Rated consumption	24 V DC	typ. 0,4 W / 0,65 VA
	230 V AC	typ. 0,3 W / 0,4 VA
Duty-cycle		100 %
Backup power time	24 V DC	< 45 ms
	230 V AC/DC	< 60 ms
Recovery time		> 200 ms
Drop-out voltage		≥ 6 V

MEASURING CIRCUIT		
Terminals		E-F1-F2
Measurand		voltage 1-phase
Measuring method		True RMS
Monitoring functions		undervoltage (U), window (W)
Measuring range		see supply voltage
Frequency		see rated frequency

V2UM230V10
Art.Nr.: 2100300

V2UM230V10P
Art.Nr.: 2100310

MEASURING CIRCUIT

Overload capacity		see supply voltage tolerance
Thresholds	Max	80 ... 115 %
	Min	75 ... 110 %
Hysteresis		1 %

TIMING CIRCUIT

Start-up delay	fixed	approx. 300 ms
Tripping delay	adjustable	0,1 ... 10 s

RANGE OF FUNCTIONS

Functions	2	U, W

STATUS INDICATION

Supply voltage	LED U (green) on	supply voltage applied
Relay status	LED R (yellow) on	output relay energized
Voltage monitor	LED MAX (red) on	indication of overvoltage
	LED MAX (red) flashes	indication of tripping delay for overvoltage
	LED MIN (red) on	indication of undervoltage
	LED MIN (red) flashes	indication of tripping delay for undervoltage

OUTPUT CIRCUIT

Terminals		15-16-18
Kind of output		Relay
Number of contacts	change-over contact	1
Contact material		AgNi
Rated voltage (IEC 60947-1)		250 V
Maximum switching voltage		400 V AC
Minimum switching voltage / switching current		12 V / 10 mA
Rated current (IEC 60947-5-1)	AC-1	8 A / 250 V
	AC-15	1,5 A / 240 V (B300)
	DC-12	8 A / 24 V
	DC-13	0,1 A / 250 V
Endurance	mechanical	30 x 10^6 switching cycles
	electrical (AC-1)	100 x 10^3 switching cycles

V2UM230V10
Art.Nr.: 2100300

V2UM230V10P
Art.Nr.: 2100310

OUTPUT CIRCUIT		
Rated frequency of operation	with load	6/min
	without load	1200/min
Fuse rating		8 A fast acting

ACCURACY		
Base accuracy		< 2,5 %
Setting accuracy		< 5 % (of full scale)
Repeat accuracy		< 1%
Temperature influence		< 0,01 % / °C
Voltage influence		-
Frequency influence		< 0,002 % / Hz

ENVIRONMENTAL CONDITIONS		
Ambient temperature	operation	-25 ... +60°C
	storage	-40 ... +70°C
Relative humidity		5 ... 95 %
Vibration	EN 60947-1	2 ... 13,2 Hz: 1 mm; 13,2 ... 100 Hz: 7 m/s²
Shock	EN 60947-1	150 m/s² 11 ms

GENERAL DATA		
Dimensions	W × H × D	22,5 x 67 x 76 mm
Mounting		DIN rail (EN60715)
Mounting position		any
Housing material		PA 66, self-extinguishing plastic, class V-0
Degree of protection	housing	IP40
	terminals	IP20
Electrical connection	V2UM...10	Screw terminal
Wire size	flexible with wire end ferrule	0,5 ... 2,5 mm² (20 AWG ... 13 AWG)
	flexible without wire end ferrule	0,5 ... 4 mm² (20 AWG ... 12 AWG)
	rigid	0,5 ... 4 mm² (20 AWG ... 12 AWG)
Stripping length		8 mm
Tightening torque		max. 1Nm

V2UM230V10
Art.Nr.: 2100300

V2UM230V10P
Art.Nr.: 2100310

GENERAL DATA

Electrical connection	V2UM...10P	Push-in terminal
Wire size	flexible with wire end ferrule	0,25 ... 1,5 mm² (24 AWG ... 16 AWG)
	flexible with plastic ferrule	0,25 ... 0,75 mm² (24 AWG ... 19 AWG)
	flexible without wire end ferrule	0,2 ... 1,5 mm² (24 AWG ... 16 AWG)
	rigid	0,2 ... 1,5 mm² (24 AWG ... 16 AWG)
Stripping length		8 mm
MTTF		-
Weight		86 g

ISOLATION DATA

Pollution degree (IEC 60947-5-1)		2
Overvoltage category (IEC 60947-5-1)		III
Rated insulation voltage (IEC 60947-1)	supply circuit / output cicuit	300 V
Rated impulse withstanding voltage (IEC 60947-1)	supply circuit / output cicuit	6 kV
Insulation test voltage (IEC 60947-1)	supply circuit / output cicuit	3780 V
Degree of protection	supply circuit / output cicuit	protective seperation

STANDARDS

Product standard	IEC 60947-5-1
Interference immunity	IEC 61000-6-2
Interference emission	IEC 61000-6-4
Approvals	

V2UM230V10
Art.Nr.: 2100300

V2UM230V10P
Art.Nr.: 2100310

FUNCTIONS

For all the functions the LEDs MIN and MAX are flashing alternating, when the minimum value for the measured voltage was chosen to be greater than the maximum value. If a failure already exists when the device is activated, the output relay R remains in off-position and the LED for the corresponding threshold is illuminated.

Undervoltage monitoring (U)
When the measured voltage falls below the adjusted threshold U_{Min} , the set interval of the tripping delay (DELAY) begins. After the interval has expired, the output relay R switches into off-position. The output relay R switches into on-position again after the measured voltage exceeds the adjusted threshold U_{Max} .

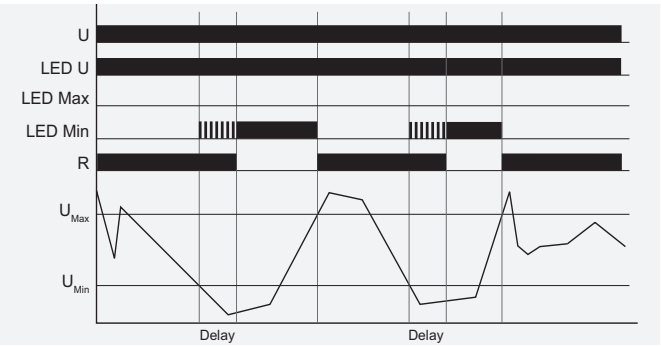

Window function (W)
When the measured voltage falls below the adjusted threshold U_{Min} , the set interval of the tripping delay (DELAY) begins. After the interval has expired, the output relay R switches into off-position. The output relay R switches into on-position again after the measured voltage exceeds the adjusted threshold U_{Min} . When the measured voltage exceeds the adjusted threshold U_{Max} , the set interval of the tripping delay (DELAY) begins. After the interval has expired, the output relay R switches into off-position. The output relay R switches into on-position again after the measured voltage falls below the adjusted threshold U_{Max} .

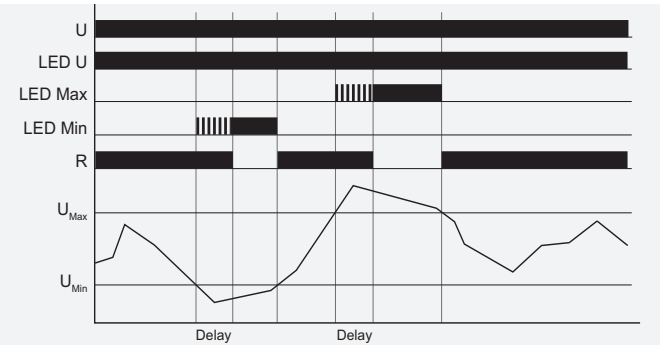

V2UM230V10
Art.Nr.: 2100300

V2UM230V10P
Art.Nr.: 2100310

CONNECTIONS

24 V DC

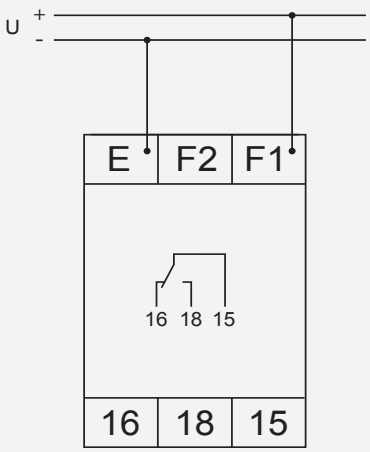

230 V AC/DC

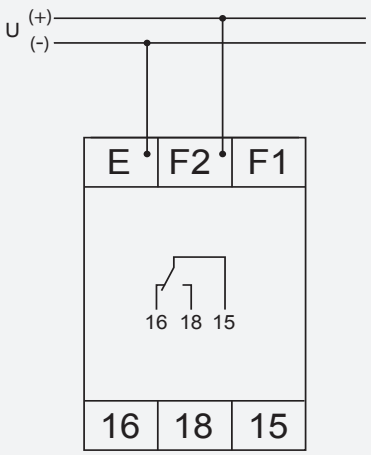

DIMENSIONS

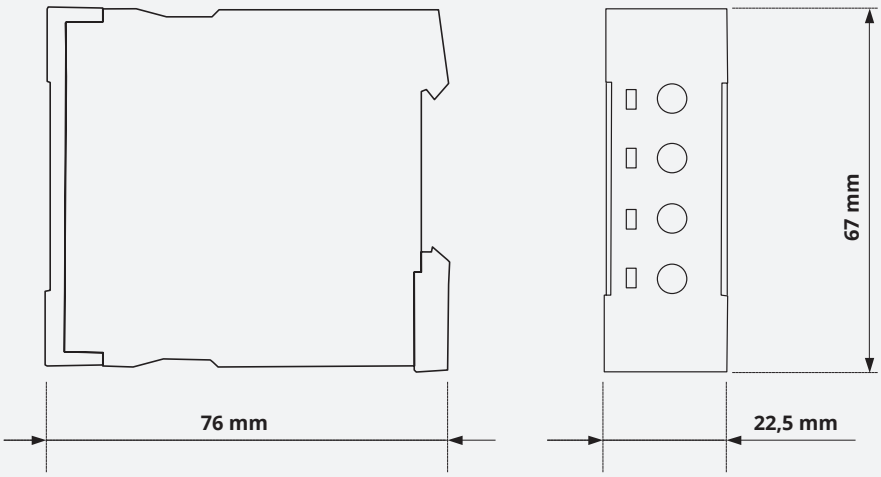

CONTACT

TELE Haase Steuergeräte Ges.m.b.H.

Vorarlberger Allee 38
1230 Vienna
Austria

CALL US +43 / 1 / 614 74 - 0

ONLINE SUPPORT info@tele-online.com