SRCES31

SAFETY RELAY SRC SERIES, SINGLE FUNCTION, SCREW TERMINALS. 3NO+1NC, FOR EMERGENCY STOP, AUXILIARY SUPPLY 24VAC/DC, UP TO CAT. 4, PLE (EN/ISO 13849-1)



General characteristics		
General characteristics		
Functions		Emergency stop
Contact characteristics		
Type of contact		3NO+1NC
Operations		
Mechanical life	cycles	10000000
Auxiliary supply		
Nominal auxiliary voltage supply		24VAC/DC
Operating range	V	20.4...26.4VAC/DC
Frequency range	Hz	50/60
Overvoltage category		III
Insulation voltage	kV	4
Protections		Short circuit with PTC
Input characteristics		
Number of inputs	Nr.	2
Resistance input circuit	kΩ	Max 1
Input current	mA	Typical 5
Output characteristics		
Number of safe outputs NO	Nr.	3
Number of safe outputs NC	Nr.	1
Number of feedback outputs	Nr.	0
Output type		Voltage free contacts, relays with forcibly guided contacts
Output contacts ratings		AC1 250V: 5A-1500VA AC15 250V: 5A DC1 24V: 5A DC13 24V: 5A
UL 508 ratings		Pilot duty: B300-R300
Mechanical life	cycles	10000000
Electrical life AC1 at 360 commutations/h	cycles	10^5
Safety parameters		
ISO 13849-1 security category		Cat. 4
ISO 13849-1 performance level		PLe
Mechanical features		
Cable connection		Screw terminals
Fixing		35mm DIN rail
Weight	g	164
Ambient conditions		
Protection degree		IP40 on front IP20 on terminals

The characteristics described in this document are subject to updates or modifications at any time. The descriptions, technical and functional information, illustrations and instructions in this brochure are purely illustrative, and are consequently not contractually binding

Pollution degree				2
Temperature				
	Operating temperature			
		min	°C	-20
		max	°C	+55
	Storage temperature			
		min	°C	-20
		max	°C	+85
Relative humidity			%	≤93

Dimensions

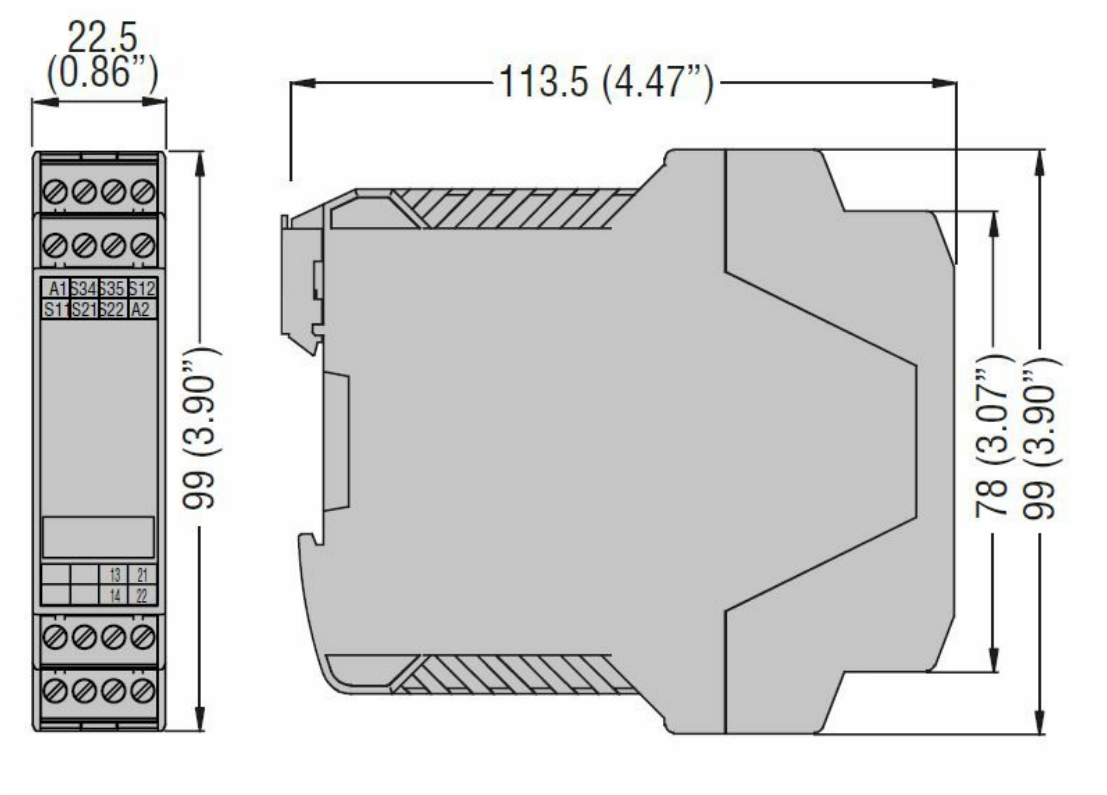

Wiring diagrams

Double channel mode, manual start

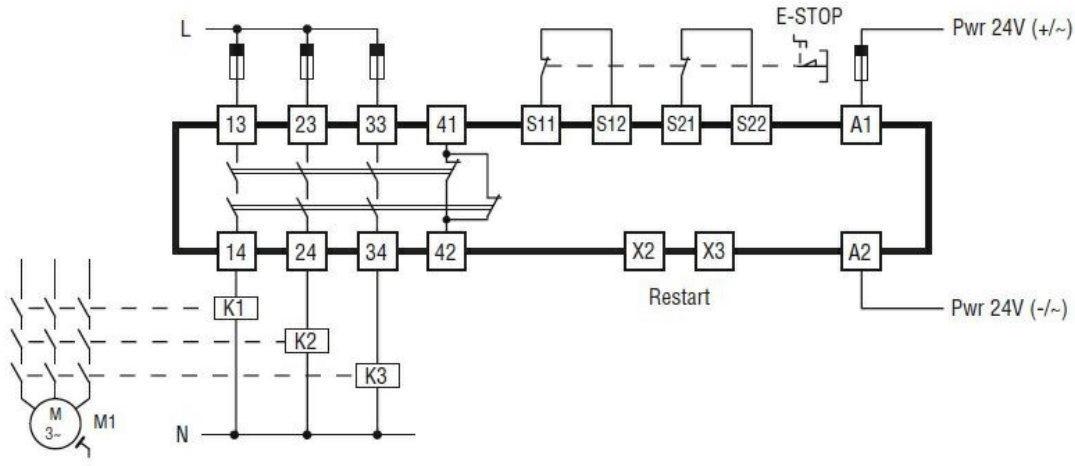

Certifications and compliance

Compliance

The characteristics described in this document are subject to updates or modifications at any time. The descriptions, technical and functional information, illustrations and instructions in this brochure are purely illustrative, and are consequently not contractually binding

	Cat. 4
	PLe secondo EN/BS/ISO 13849-1
	SIL3 secondo EN 61508
Certificates	
	cULus
	TÜV

ETIM classification

ETIM 8.0	EC001449 - Device for monitoring of safety-related circuits

The characteristics described in this document are subject to updates or modifications at any time. The descriptions, technical and functional information, illustrations and instructions in this brochure are purely illustrative, and are consequently not contractually binding