Force-GT DIN Rail Power Supply

DRF-240W series / DRF-☐V240W1G☐A



FORCE-GT

Highlights & Features

- Universal AC input voltage range
- Built-in constant current circuit for charging applications
- Full load operating temperature up to 60°C
- Cold start at -40°C
- Ultra-Slim design
- Long life electrolytic capacitor
- Built-in DC OK relay and LED indicator
- Conformal coating on PCBAs to protect against common dust and pollutants

Safety Standards

CB Certified for worldwide use

Model Number: DRF-☐V240W1G☐A
Unit Weight: 0.64 kg (1.41 lb)
Dimensions (H x W x D): 123.6 x 40 x 116.8 mm (4.87 x 1.57 x 4.60 inch)

General Description

The Force-GT Series DIN rail industrial power supply features high power density and high efficiency. The Series offers overcurrent protection in constant current mode, making it suitable for charging applications. Conformal coating is applied on the PCBAs to protect against dust and pollutants often found in harsh industrial environments. The Series' electromagnetic radiated and conducted emissions are compliant with heavy industrial Class B Emission standard and Immunity standard, and complies with environmental protection standards RoHS Directive.

Model Information

Force-GT DIN Rail Power Supply

Model Number	Input Voltage Range	Rated Output Voltage	Rated Output Current
DRF-12V240W1G☐A	90-264 Vac	12 Vdc	20.0 A
DRF-24V240W1G☐A		24 Vdc	10.0 A
DRF-48V240W1G☐A		48 Vdc	5.0 A

Model Numbering

DR	F –	☐V	240W	1	G	☐	A
DIN Rail	Product Series F – Force	Output Voltage 12 – 12 V 24 – 24 V 48 – 48 V	Output Power	Single Phase	G – General Type	B – Screw terminal	Delta Standard

All parameters are specified at 25°C ambient and AC input unless otherwise indicated.
www.DeltaPSU.com (April 2023, Rev. 02.2)

Force-GT DIN Rail Power Supply
DRF-240W series / DRF-☐V240W1G☐A

Specifications

Model Number	DRF-12V240W1G☐A	DRF-24V240W1G☐A	DRF-48V240W1G☐A

Input Ratings / Characteristics

Nominal Input Voltage	100-240 Vac		
Input Voltage Range	90-264 Vac		
Nominal Input Frequency	50-60 Hz		
Input Frequency Range	47-63 Hz		
Input Current	2.5 A typ. @ 115 Vac, 1.3 A typ. @ 230 Vac		
Efficiency at 100% Load	93.5% typ.@ 230 Vac	94.5 typ. @ 230 Vac	94.0% typ. @ 230 Vac
Average Efficiency (25%, 50%, 75%, 100%)	92.0% typ. @ 115 Vac	92.5% typ. @ 115 Vac	91.5% typ. @ 115 Vac
No Load Power Consumption	0.5 W max @ 115 Vac & 230 Vac		0.8 W max @ 115 Vac & 230 Vac
Max Inrush Current (Cold Start)	40 A typ. @ 230 Vac		
Power Factor at 100% Load	> 0.96 @ 115 Vac & > 0.93 @ 230 Vac		
Leakage Current	< 0.5 mA @ 240 Vac		

Output Ratings / Characteristics[*1]

Nominal Output Voltage		12 Vdc	24 Vdc	48 Vdc
Factory Set Point Tolerance		12 Vdc ± 1%	24 Vdc ± 1%	48 Vdc ± 1%
Output Voltage Adjustment Range		12-14 Vdc	24-28 Vdc	48-55 Vdc
Output Current		0-20.0 A	0-10.0 A	0-5.0 A
Output Power		240 W max		
Line Regulation		± 0.5% @ 115 Vac & 230 Vac		
Load Regulation		± 1.0%	± 0.5%	± 0.5%
PARD[*2] (20 MHz)		< 100 mVpp @ 0°C to +70°C < 300 mVpp @ -30°C to 0°C	< 100 mVpp @ 0°C to +70°C < 300 mVpp @ -30°C to 0°C	< 150 mVpp @ 0°C to +70°C < 360 mVpp @ -30°C to 0°C
Rise Time		30 ms typ. @ 115 Vac & 230 Vac		
Start-up Time		500 ms typ. @ 115 Vac & 230 Vac (12 V & 24 V) 800 ms typ. @ 115 Vac & 230 Vac (48 V)		
Hold-up Time		30 ms typ. @ 115 Vac & 230 Vac (100% load)		
Dynamic Response (Overshoot & Undershoot O/P Voltage)		± 10% @ 115 Vac & 230 Vac input, 10-100% load (Slew Rate: 2.5 A/μS, 50% duty cycle @ 5 Hz & 10 kHz)		
Start-up with Capacitive Loads		10,000 μF Max	10,000 μF Max	5,000 μF Max
Functional	DC OK Relay Contact	30 V / 1 A The relay contact are normally “ON” (closed) when the output (Vout) is greater than 90% typ. of its rated value.		

*1 For power will be de-rating from 60°C to 70°C, and Vin < 100 Vac, see Engineering Data power de-rating information.
*2 PARD is measured with an AC coupling mode, 5 cm wires, and in parallel to end terminal with 0.1 μF ceramic capacitor & 47 μF electrolytic capacitor. PSU need to burn in around 5 minutes when AMB ≤ 0°C.

Force-GT DIN Rail Power Supply
DRF-240W series / DRF-☐V240W1G☐A

Model Number	DRF-12V240W1G☐A	DRF-24V240W1G☐A	DRF-48V240W1G☐A

Mechanical

Case Cover / Chassis		Metal
Dimensions (H x W x D)		123.6 x 40 x 116.8 mm (4.87 x 1.57 x 4.60 inch)
Unit Weight		0.64 kg (1.41 lb)
Indicator	Green LED	DC OK
Cooling System		Convection
Terminal*3	Input	3 Pins (Rated 600 V / 30 A)
	Output	4 Pins (Rated 600 V / 30 A)
	DC OK	2 Pins (Rated 300 V / 6 A)
Wire	Input	AWG 18-12 (Current rating can refer to “AWG Wire Table”)
	Output	AWG 18-12 (Current rating can refer to “AWG Wire Table”)
	DC OK	AWG 22-16 (Current rating can refer to “AWG Wire Table”)
Mounting Rail		Standard TS35 DIN Rail in accordance with EN 60715
Noise (1 Meter from power supply)		Sound Pressure Level (SPL) < 25 dBA

*3 The torque at the input and output terminal connectors shall not exceed 5.2 Kgf.cm (4.5 lbf.in).

Environment

Surrounding Air Temperature	Operating	-30°C to +70°C (-40°C Cold Start)
	Storage	-40°C to +85°C
Power De-rating	Temperature	> 60°C de-rate power by 2.5% / °C
	Input Voltage	< 100 Vac de-rate power by 1% / Vac
Operating Humidity		5 to 90% RH (Non-Condensing)
Operating Altitude		0 to 5,000 Meters (16,400 ft.)
Shock Test	Non-Operating	IEC 60068-2-27, Half Sine Wave: 50 G for duration of 11 ms; 3 times per direction
Vibration	Operating	IEC 60068-2-6, Sine Wave: 10 Hz to 500 Hz; 4 G peak; 60 min per axis for all X, Y, Z directions
Over Voltage Category		II (Compliance to EN 62477-1 OVC III with 2000 meters altitude)
Pollution Degree		2

Force-GT DIN Rail Power Supply
DRF-240W series / DRF-☐V240W1G☐A

Model Number	DRF-12V240W1G☐A	DRF-24V240W1G☐A	DRF-48V240W1G☐A

Protections

Overvoltage	<18 V, SELV Output, Latch Mode	<34 V, SELV Output, Latch Mode	<68 V, SELV Output, Latch Mode
Overload / Overcurrent	105 - 150% of rated load current, Auto-recovery Continuous current limit Mode*4 (Vo > 80%)		
Over Temperature	Latch Mode		
Short Circuit	Hiccup Mode, Non-Latching (Auto-Recovery when the fault is removed)		
Internal Fuse at L pin	T4 A / 250 V		
Protection Against Shock	Class I with PE*5 connection		

*4 Constant current limit protection for inductive and capacitive load applications
*5 PE: Primary Earth

Reliability Data

MTBF	Telcordia SR-332	> 700,000 hrs	I/P: 115 Vac & 230 Vac, O/P: 100% load, Ta: 25°C
Expected Cap Life Time		10 years (115 Vac & 230 Vac, 50% load @ 50°C)	

Safety Standards / Directives

Electrical Safety	CB scheme	IEC 62368-1, IEC 60950-1, IEC 61010-1/-2-201
	TUV Bauart	EN/BS EN 62368-1, EN/BS EN 61010-1/-2-201
	UL/cUL	UL 62368-1, UL 61010-1/-2-201
	EAC	TP TC 004/2011
	BSMI	CNS14336-1
	CCC	GB4943.1
CE		In conformance with EMC Directive 2014/30/EU and Low Voltage Directive 2014/35/EU
UKCA		In conformance with Electrical Equipment (Safety) Regulations 2016 and Electromagnetic Compatibility Regulations 2016
Galvanic Isolation	Input to Output	4.0 kVac
	Input to Ground	2.0 kVac
	Output to Ground	1.5 kVac
	Output to DC OK	500 Vac

Force-GT DIN Rail Power Supply
DRF-240W series / DRF-☐V240W1G☐A

Model Number	DRF-12V240W1G☐A	DRF-24V240W1G☐A	DRF-48V240W1G☐A

EMC*6

Emissions (CE & RE)		CISPR 32, EN/BS EN 55032, EN/BS EN 61000-6-4, AS/NZS CISPR 32, EN/BS EN 61204-3, KS C 9832 Compliance to FCC Title 47, EN 61000-6-3: Class B		
Component Power Supply for General Use		EN/BS EN 61204-3		
Immunity		EN/BS EN 55035, KS C 9835, EN/BS EN 61000-6-2 Compliance to EN 61000-6-1		
Electrostatic Discharge	IEC 61000-4-2	Level 4 Criteria A[1)] Air Discharge: 15 kV Contact Discharge: 8 kV		
Radiated Field	IEC 61000-4-3	Criteria A[1)] 80 MHz – 1 GHz, 10 V/M, 80% Modulation (1 kHz) 1.4 GHz – 2 GHz, 3 V/M, 80% Modulation (1 kHz) 2 GHz – 2.7 GHz, 1 V/M, 80% Modulation (1 kHz)		
Electrical Fast Transient / Burst	IEC 61000-4-4	Level 3 Criteria A[1)] 2 kV		
Surge	IEC 61000-4-5	Level 4 Criteria A[1)] Common Mode[4)]: 4 kV Differential Mode[5)]: 2 kV		
Conducted	IEC 61000-4-6	Level 3 Criteria A[1)] 150 kHz – 80 MHz, 10 Vrms		
Power Frequency Magnetic Fields	IEC 61000-4-8	Level 4 Criteria A[1)] 30 A/m		
Voltage Dips and Interruptions	IEC 61000-4-11	0% residual; 1 cycle, Criteria B[2)] 40% residual; 10 cycle, Criteria C[3)] 70% residual; 25 cycle, Criteria C[3)]		
Harmonic Current Emission		IEC/EN/BS EN 61000-3-2, Class A & Class D		
Voltage Fluctuation and Flicker		IEC/EN/BS EN 61000-3-3		
Voltage Sag Immunity SEMI F47 – 0706		80% of 200 Vac 70% of 200 Vac 50% of 200 Vac	160 Vac, 1000 ms 140 Vac, 500 ms 100 Vac, 200 ms	Criteria A[1)] Criteria A[1)] Criteria A[1)]

1) Criteria A: Normal performance within the specification limits
2) Criteria B: Temporary degradation or loss of function which is self-recoverable
3) Criteria C: Output out of regulation, shuts down during test (Need to recycle AC power cord to normal operation after test)
4) Asymmetrical: Common mode (Line to earth)
5) Symmetrical: Differential mode (Line to line)

*6 Power supply is considered a component in the end-user's system. Please contact our local sales to get more information about the power supply EMC test setup.

Force-GT DIN Rail Power Supply

DRF-240W series / DRF-☐V240W1G☐A

Block Diagram

DRF-☐V240W1G☐A

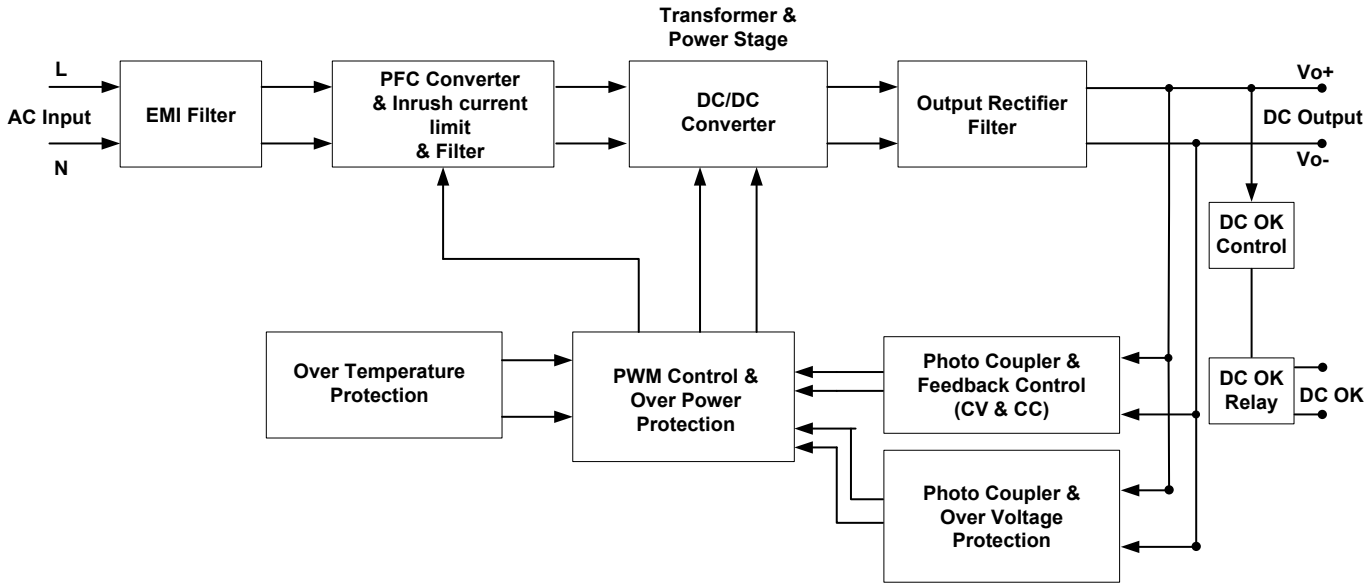

Device Description

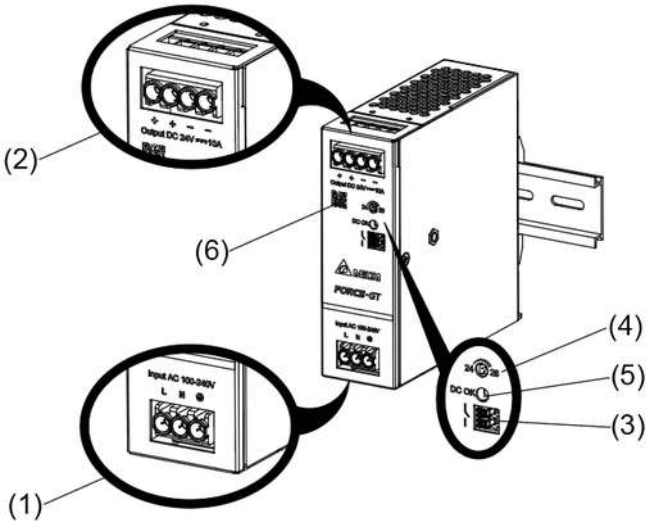

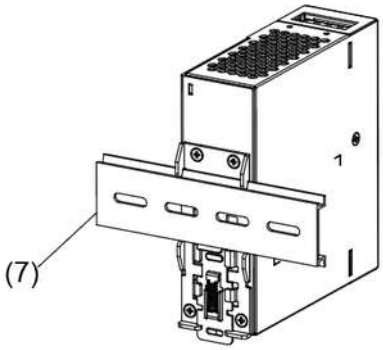

1) Input terminal block connector
2) Output terminal block connector
3) DC OK relay contact
4) DC voltage adjustment potentiometer
5) DC OK LED (Green)
6) QR code for product link
7) Universal mounting rail system

All parameters are specified at 25°C ambient and AC input unless otherwise indicated.

Force-GT DIN Rail Power Supply
DRF-240W series / DRF-☐V240W1G☐A

Dimensions

H x W x D: 123.6 x 40 x 116.8 mm (4.87 x 1.57 x 4.60 inch)

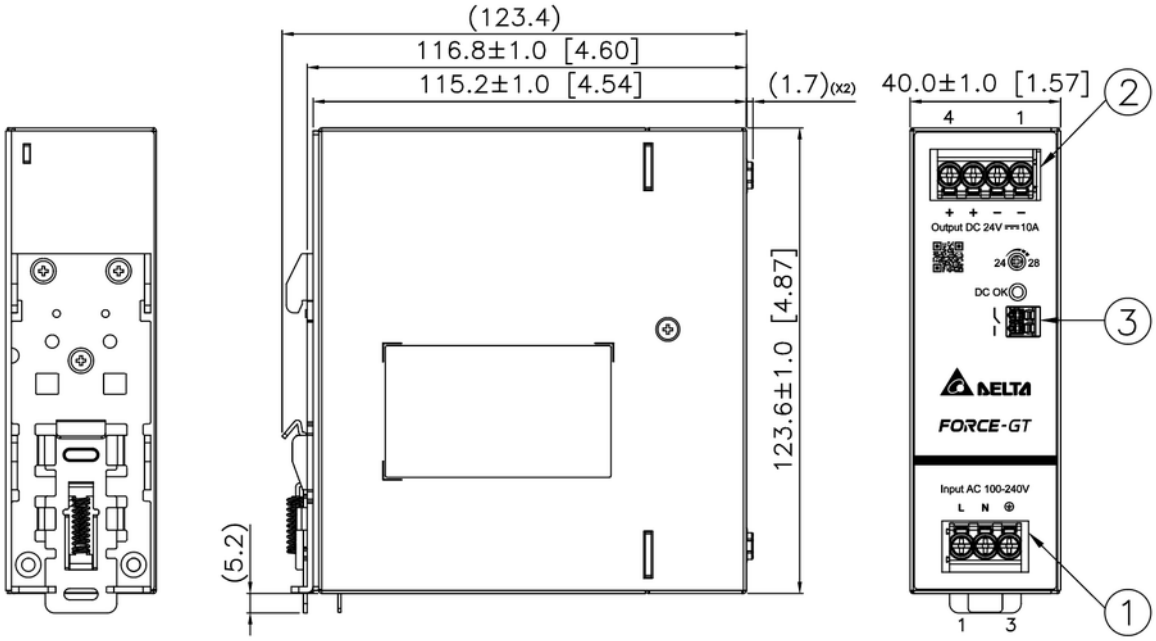

*Unless otherwise specified tolerance of dimension are ± 0.5 mm

Item	Device Description
1	Input terminal block connector Pin 1: L Pin 2: N Pin 3: PE
2	Output terminal block connector Pin 1 to 2: V(-) Pin 3 to 4: V(+)
3	DC OK relay contact

AWG Wire Table

Current Rating for PVC Wire	
6 AWG	52.5 A
8 AWG	37.5 A
10 AWG	29.0 A
12 AWG	22.5 A
14 AWG	16.5 A
16 AWG	12.0 A
18 AWG	9.0 A
20 AWG	6.5 A
22 AWG	5.0 A
24 AWG	3.5 A
26 AWG	2.5 A
28 AWG	2.0 A
30 AWG	1.5 A

Force-GT DIN Rail Power Supply
DRF-240W series / DRF-☐V240W1G☐A

Engineering Data

Output Load De-rating VS Surrounding Air Temperature

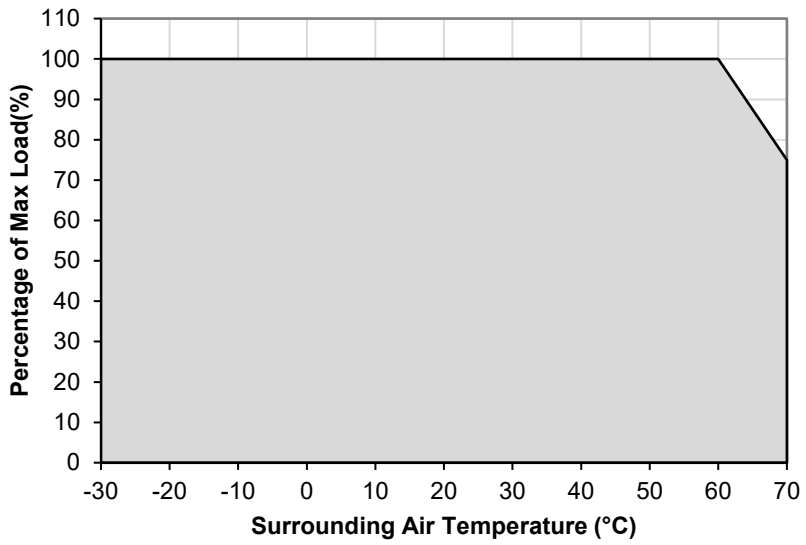

Fig. 1 **De-rating for Vertical Mounting Orientation**
> 60°C de-rate power by 2.5% / °C

Note

1. Power supply components may degrade, or be damaged, when the power supply is continuously used outside the shaded region, refer to the graph shown in Fig. 1.
2. The PSU will be bouncing and start up time will not exceed 5 s when ambient temperature at -30°C.
3. If the output capacity is not reduced when the surrounding air temperature > 60°C, the device will run into Over Temperature Protection. When activated, power supply will latch off, until the surrounding air temperature is lowered or the load is reduced as far as necessary to keep the device in working condition, and require removal/re-application of input AC voltage in order to restart.
4. In order for the device to function in the manner intended, it is also necessary to keep a safety distance as recommended in the safety instructions while the device is in operation.
5. Depending on the surrounding air temperature and output load delivered by the power supply, the device can be very hot!
6. Need to consider power de-rating if Surrounding Air Temperature is > 60°C.
7. If the device has to be mounted in any other orientation, please contact **info@deltapsu.com** for more details.

Output Load De-rating VS Input Voltage

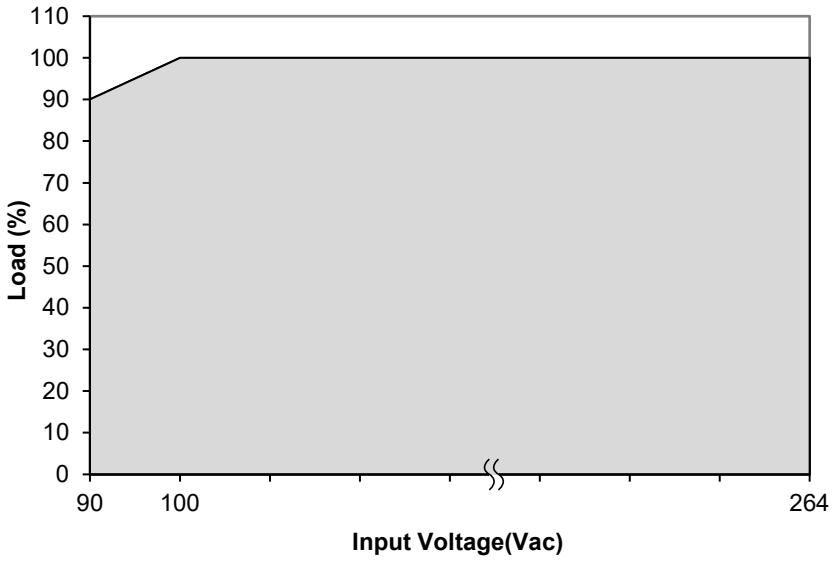

Fig. 2 **De-rating for AC Input Voltage**
< 100 Vac de-rate power by 1% / Vac

- No output power de-rating for the input voltage from 100 Vac to 264 Vac

Force-GT DIN Rail Power Supply
DRF-240W series / DRF-☐V240W1G☐A

Assembly & Installation

The power supply unit (PSU) can be mounted on 35 mm DIN rails in accordance with EN 60715. The device should be installed with input terminal block at the bottom.

Each device is delivered ready to install.

Mounting

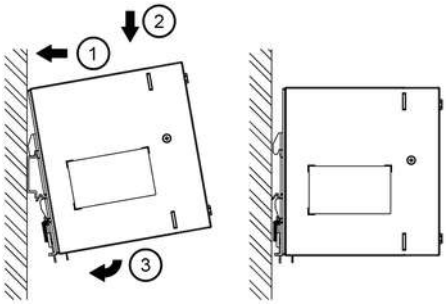

Fig. 3.1 Mounting

Snap on the DIN rail as shown in Fig. 3.1:
1. Tilt the unit upwards and insert it onto the DIN rail.
2. Push downwards until stopped.
3. Press against the bottom front side for locking.
4. Shake the unit slightly to ensure that it is secured

Dismounting

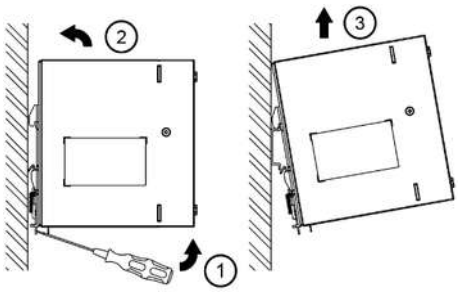

Fig. 3.2 Dismounting

To uninstall, Delta provides an easy way to pull or slide down the latch with screw driver as shown in Fig. 3.2. Then slide the power supply unit (PSU) in the opposite direction, release the latch and pull out the power supply unit (PSU) from the rail.

Safety Instructions

■ **Vertical Mounting**

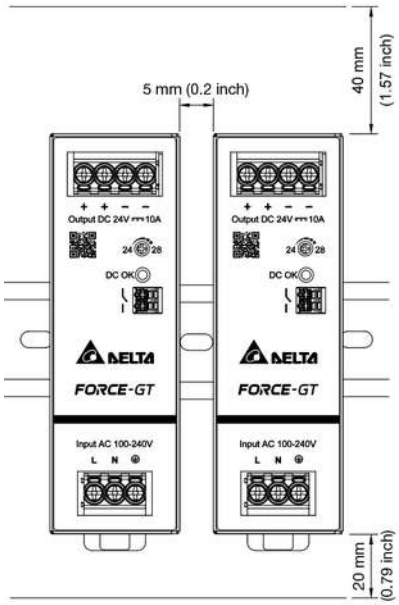

- ALWAYS switch mains of input power OFF before connecting and disconnecting the input voltage to the unit. If mains are not turned OFF, there is risk of explosion / severe damage.
- **To guarantee sufficient convection cooling, keep a distance of 40 mm (1.57 inch) above and 20 mm (0.79 inch) below the device as well as a lateral distance of 5 mm (0.2 inch) to other units and if load less than 50%, lateral distance can be 0 mm. In case the adjacent device is a heat source, the lateral distance will be 15 mm (0.6 inch).**
- Note that the enclosure of the device can become very hot depending on the surrounding air temperature and load of the power supply. Risk of burns!
- The main power must be turned off before connecting or disconnecting wires to the terminals.
- DO NOT insert any objects into the unit.
- Hazardous voltages may be present for up to 5 minutes after the input mains voltage is disconnected. Do not touch the unit during this time.
- The power supplies are built in units and must be installed in a cabinet or room (condensation free environment and indoor location) that is relatively free of conductive contaminants.

Force-GT DIN Rail Power Supply
DRF-240W series / DRF-☐V240W1G☐A

Functions

DC OK Relay Contacts and LED Indicator Characteristics

DC OK Relay Contacts Status	Characteristics
Contact closes	The output voltage > 90% typ. of its steady state set value.
Contact opens	The output voltage < 90% typ. of its steady state set value.

Operating Status	DC OK (Green LED)	DC OK Relay Contact
Normal Operation	ON	Closed
Overload (Hiccup Mode)	INTERMITTENT	Open
Output Short Circuit	INTERMITTENT	Open
Over Temperature	OFF	Open
No Input Power	OFF	Open

Force-GT DIN Rail Power Supply
DRF-240W series / DRF-☐V240W1G☐A

■ **Graph illustrating the Start-up Time, Rise Time, and Hold-up Time**

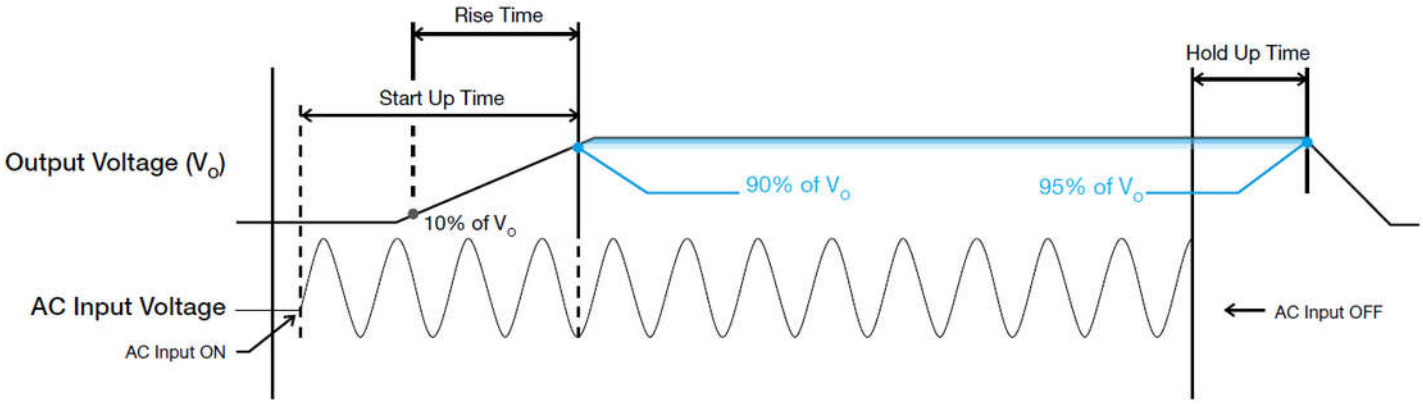

Start-up Time

The time required for the output voltage to reach 90% of its final steady state set value, after the input voltage is applied.

Rise Time

The time required for the output voltage to change from 10% to 90% of its final steady state set value.

Hold-up Time

Time between the collapse of the AC input voltage, and the output falling to 95% of its steady state set value.

Inrush Current

Inrush current is the peak, instantaneous, input current measured and, occurs when the input voltage is first applied. For AC input voltages, the maximum peak value of inrush current will occur during the first half cycle of the applied AC voltage. This peak value decreases exponentially during subsequent cycles of AC voltage.

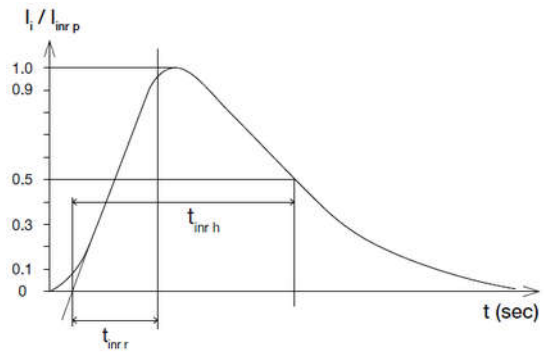

Dynamic Response

The power supply output voltage will remains within ±10% of its steady state value, when subjected to a dynamic load from 10% to 100% of its rated current.

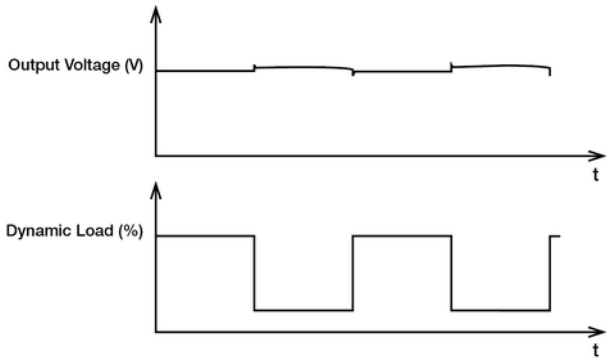

All parameters are specified at 25°C ambient and AC input unless otherwise indicated.
www.DeltaPSU.com (April 2023, Rev. 02.2)

Force-GT DIN Rail Power Supply
DRF-240W series / DRF-☐V240W1G☐A

Overload & Overcurrent Protections (Continuous Current)

The power supply offers constant current limit protection for inductive and capacitive load applications when output current range is 105~150% of I_O (Max load) and output voltage large than 80%. Upon such an occurrence, the V_O (output voltage) will start to droop. Once the power supply has reached its maximum power limit, the protection will be activated; and, the power supply will operate in continuous current. The power supply will recover once the cause of OLP or OCP is removed, and I_O (output current) is back within the specified range.

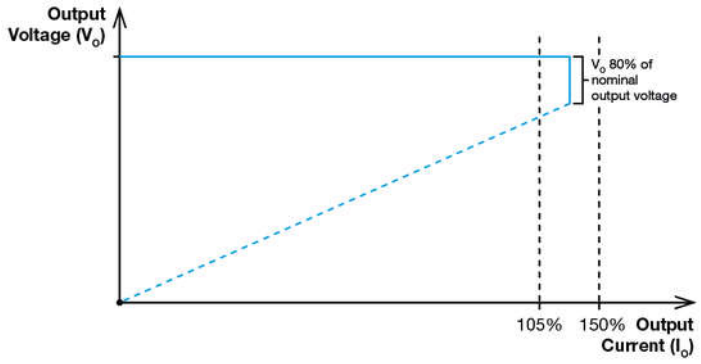

Short Circuit Protection (Auto-Recovery)

The power supply's output Short Circuit Protection function also provides protection against short circuits. When a short circuit is applied, the output current will operate in "Hiccup mode". The power supply will return to normal operation after the short circuit is removed.

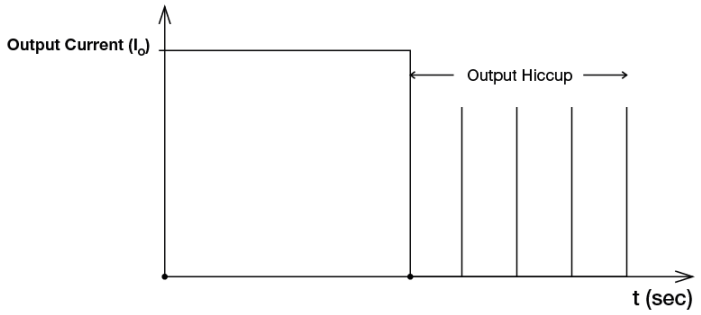

Overvoltage Protection (Latch Mode)

The power supply's overvoltage circuit will be activated when its internal feedback circuit fails. The output voltage shall not exceed its specifications as described in "Protections" section. Power supply will latch off, and require removal/re-application of input AC voltage in order to restart.

The power supply should be latch.

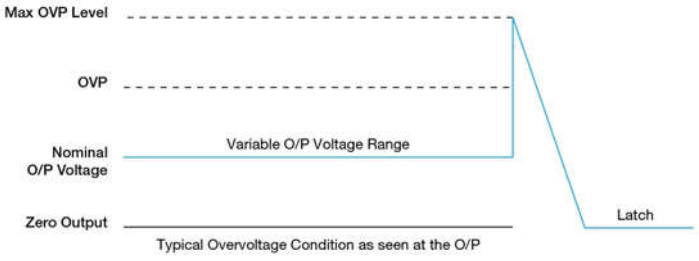

Over Temperature Protection (Latch Mode)

As described in load de-rating section, the power supply also has Over Temperature Protection (OTP). In the event of a higher operating temperature at 100% load; or, when the operating temperature is beyond what is recommended in the de-rating graph, the OTP circuit will be activated. When activated, power supply will latch off, until the surrounding air temperature drops to its normal operating temperature or the load is reduced as recommended in the de-rating graph. Removal/re-application of input AC voltage will then be required in order to restart.

Force-GT DIN Rail Power Supply
DRF-240W series / DRF-☐V240W1G☐A

Others

Attention

Delta provides all information in the datasheets on an “AS IS” basis and does not offer any kind of warranty through the information for using the product. In the event of any discrepancy between the information in the catalog and datasheets, the datasheets shall prevail (please refer to **www.DeltaPSU.com** for the latest datasheets information). Delta shall have no liability of indemnification for any claim or action arising from any error for the provided information in the datasheets. Customer shall take its responsibility for evaluation of using the product before placing an order with Delta.

Delta reserves the right to make changes to the information described in the datasheets without notice.

Manufacturer and Authorized Representatives Information

Manufacturer

Thailand
Delta Electronics (Thailand) PCL.
909 Pattana 1 Rd., Muang, Samutprakarn, 10280 Thailand

Taiwan
Delta Electronics, Inc.
3 Tungyuan Road, Chungli Industrial Zone, Taoyuan County 32063, Taiwan

Authorized Representatives

The Netherlands
Delta Greentech (Netherlands) B.V.
Zandsteen 15, 2132 MZ Hoofddorp, The Netherlands

United Kingdom
Delta Electronics Europe Limited
1 Redwood Court, Peel Park Campus,
East Kilbride, Glasgow, G74 5PF, United Kingdom