EMM Series Multimeters

User Manual



www.entes.com.tr

Index

Introduction **3**
Safety and warnings 3
General Specifications 3
Mechanical and Environmental Conditions 4
Standards 4
Technical Specifications 4
Connection Diagram 6
LED Indicator and GUI design 9
Key Functions 9
Measurement **10**
Voltage 10
Current 11
Neutral Current 11
Frequency 12
Cos Phi 12
Total Cos Phi 12
Total Run Hour 13
Run Hour 13
Settings **14**
User Settings 14
Security Settings 14
Password Setting 15
Connection Settings 15
Connection Type 16
Frequency 17
Demand Period (Based on Model) 17
Voltage Transformer Setting 18
Current Transformer Setting 19
Communication Settings 19
Output Settings 21
Alarm Settings 22
Alarm Messages 31

Introduction

Safety and Warnings

Caution
Failure to follow the instructions below may result in serious injuries or even death..

- Disconnect all power when installing the device.
- Do not remove the front panel while the device is connected to the mains.
- Do not clean the device with solvent or similar material. Use only a dry cloth.
- Check that the connections are correct before operating the device.
- Contact your authorized dealer if you have any questions about your device.
- The device is for panel mounting only.
- The fuse to be used must be type F and the current limit value must be 1A.

The manufacturer cannot be held responsible for unwanted situations that may emerge due to failure to follow the measures above.

Security
Read the entire operating manual before using the device.

- Connect a button or a circuit breaker between supply inlets of the product and the mains.
- This button or circuit breaker must be close to the product.
- Place a mark to indicate that this button or circuit breaker will be used to separate the product from the mains.

Warranty
The warranty period of the device is 2 (two) years. In case of a malfunction, the product should be repaired by the manufacturing company only. Otherwise, the warranty will be void.

General Specifications

- Wide supply range
- Slim design for narrow panels
- 3-Phase Voltage 3-Phase Current measurement
- Alarm options (based on model)
- Run Hour
- 2x Relay Output (based on model)
- Modbus communication (based on model)
- 96 x 96 panel mounting

Mechanical and Environmental Conditions

Operating Conditions	Value Range
Dimensions	96x96
Maximum Depth (Inside the Panel)	44.5 mm
Installation	Panel type
IP protection	20
Display	LED display
Button	4 x Universal interface
Storage Temperature	-30 / +80°C
Operating Temperature	-20 / +70°C
Maximum Humidity	95% (noncondensing)

Standards

EN 61326,61000-6-4,61000-6-2 emc
EN 61010-1 Safety
EN 60529 Mechanic
EN 60068-2-1,60068-2-2 ,60068-2-30 Environmental

Technical Specifications

Operating Voltage (Un)	100-270 VAC (-15%+10%)
Operating Frequency (f)	50-60 Hz
Input Power Consumption	<5 VA
Measuring Inputs Power Consumption	<1 VA
Measuring Voltage Input (Vin)	10-300 VAC(VLN) 10-480 VAC(VLL)
Measuring Current Input (Iin)	0.05-5.5 A
Class	
Voltage	0,5%
Current	0,5%
Frequency	±0.02 Hz
cosφ	± 0.02
Demand Time	Adjustable 60/120/300/600/1200/1800/3600 sec
Communication (Insulated)	4kV
Baud Rate	Adjustable 2400/ 4800/ 9600/19200/38400/57600/115200
Address	Adjustable 1-256
Parity	Adjustable Single/Double
Relay Ouputs	2x (5A 250 VAC/ 1250VA)
Connection	3P3W, 3P4W, Aron, 3P3W(B), 3P4W(B)
Ambient Temperature	-20+70°C
Storage Temperature	-30+80°C
Humidity	95%
Indicator	LED Display
Dimensions	96x96x44.5
Device Protection Class	IP 20

Parameter	Unit	Description	Range	Sensitivity	Maximum Value
Voltage					
V1, V2, V3	V	Phase-Neutral, Rms Voltage	10-300 VAC	0,5%	6 MV
U1, U2, U3	V	Phase-Phase, Rms Voltage	10-480 VAC	0,5%	9.6 MV
Frequency	Hz	Voltage Frequency	50-60 Hz	±0.02 Hz	60
Current					
I1, I2, I3	A	Phase Current	0.05-5.5 A	1%	10kA
Power					
Cosϕ		Cos Phi	-1.000 - +1.000	± 0.02	-1.000 - +1.000

Technical Drawing

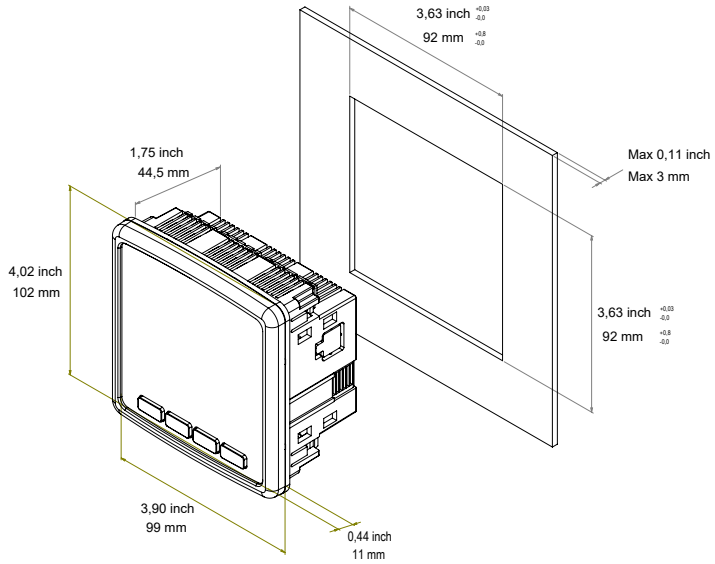

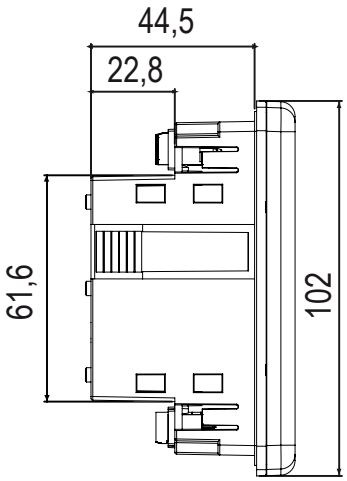

Connection Diagram

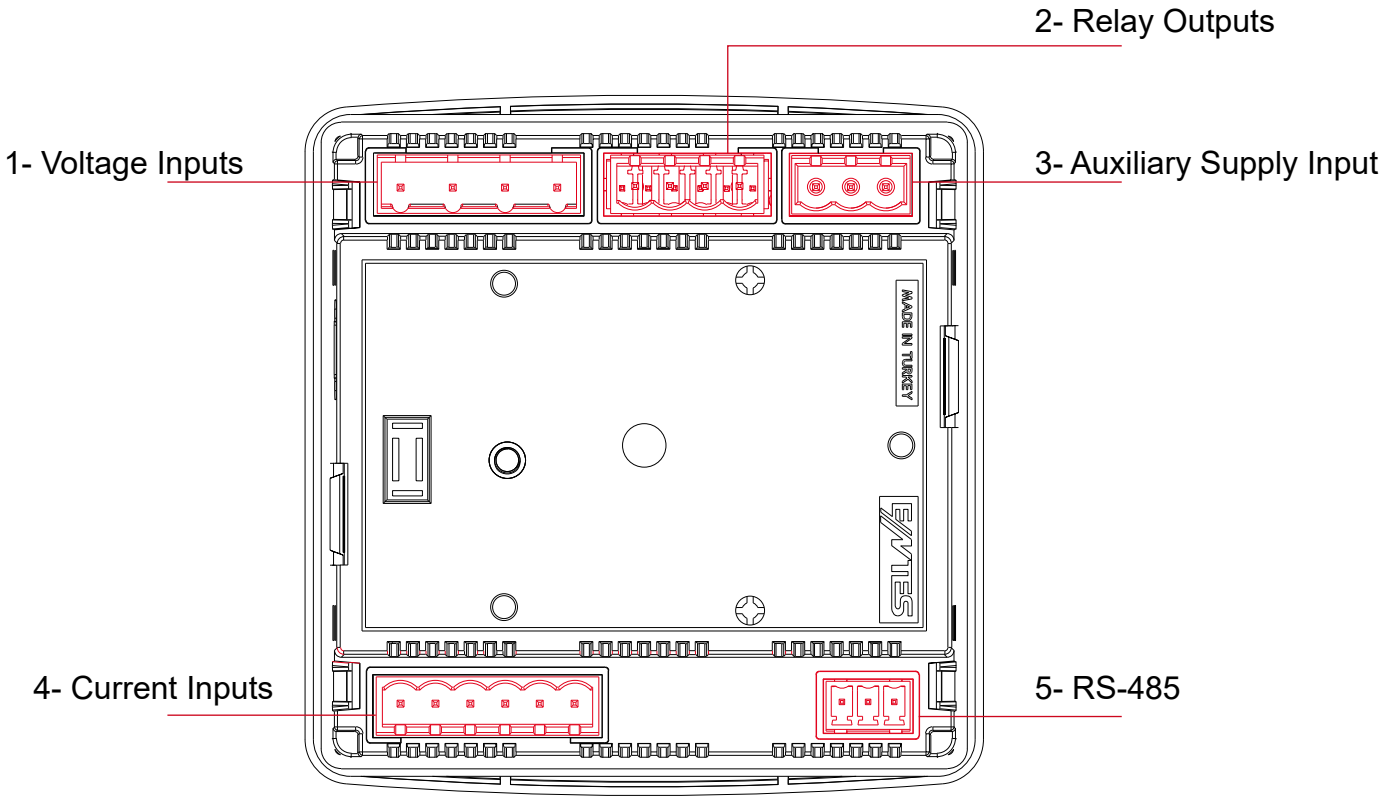

Terminal Structure;

	Connection	Range	Klemens Tipi
1	Voltage Inputs	3 x 10 – 480 VAC 50/60Hz	4 x 7.62 mm socket 2.5 mm², 4 mm²
2	Relay Outputs	2 x 250 VAC 5A 1250 VA	4 x 5.08 mm socket 2.5 mm² / 4 mm²
3	Auxiliary supply input	100-270 VAC / 50-60 Hz	3 x 5.08 mm socket 2.5 mm² / 4 mm²
4	Current Inputs	3 x 0.05 – 5.5A / AC 50-60 Hz	6 x 5.08 mm socket 2.5 mm² / 4 mm²
5	RS-485	Max. ±12V	3 x 3.81 mm socket 1.5 mm² / 2.5 mm

1. 3P4W (Three-Phase Four-Wire) Connection

In this type of connection, three voltage and three current connections are made.

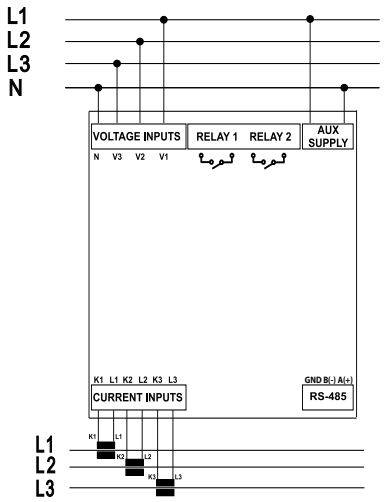

2. 3P3W (Three-Phase Three-Wire) Connection

In this type of connection, three voltage and three current connections are made.

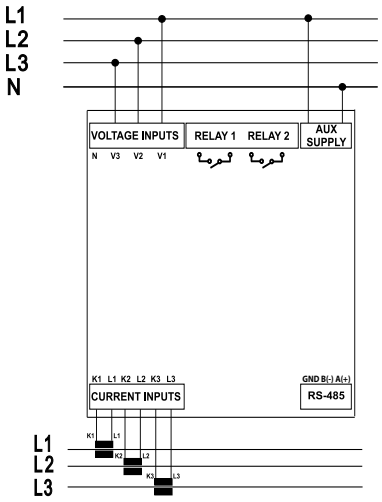

3. Aron Connection without Neutral

In this type of connection, three voltage and two current connections are made.

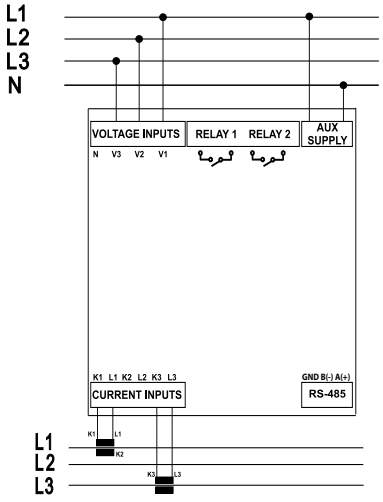

4. 3P4W BLN (Three-Phase Four-Wire Balanced) Connection

In this type of connection, four voltage and one current connections are made. The device displays the value measured at the current input connected to the first phase on the screen of the same value for other phases.

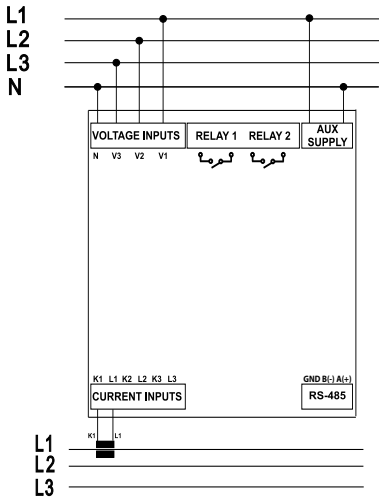

5. 3P3W BLN (Three-Phase Three-Wire Balanced) Connection

In this type of connection, three voltage and one current connections are made. The device displays the value measured at the current input connected to the first phase on the screen of the same value for other phases.

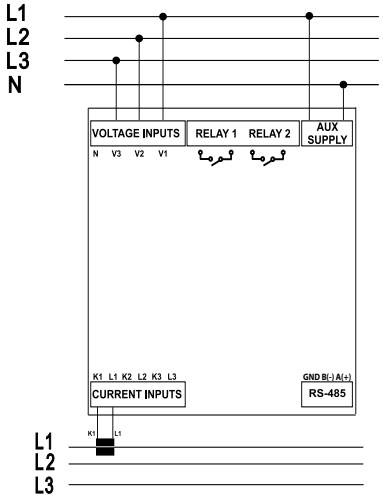

Connection types may vary depending on the device model.

LED Indicator and GUI design



Key Functions

Phase 1 / 2 / 3 LEDs	L1 L2 L3	It informs you that voltage is taken from the phases. (e.g. LED L1 lights up if voltage is being taken from phase L1.)
VLN Measurement LED	VLN	It lights up when the screen showing phase-neutral voltages is on
VLL Measurement LED	VLL	It lights up when the screen showing phase-phase voltages is on
Current Measurement LED	I	It lights up when the screen showing phase currents is on
Frequency LED	Hz	It is the frequency LED
cosφ Measurement LED	cosφ	It lights up when the screen showing phase cosφ is on
		It lights up when there is a phase sequence error.
Latch Symbol	LAT	It lights up when the alarm is activated and continues to light up until you press and hold the 3rd-second key after the alarm is deactivated.
Unit Symbols		
Percentage Symbol	%	The screen for THD and Hysteresis also lights up.
Second Symbol	S	
Total Symbol	Σ	
Language Navigation LED	A	It lights up when the screen where the menu and display language of the device can be set is on
Lock Navigation LED		It lights when the main setting screen of the password protection values is on
Mains Navigation LED	Y/Δ	It lights up when the screen where the mains settings of the meter are completed is on
Transformer Navigation LED		It lights up when the screen with voltage transformer and current transformer master view and settings is on
Communication Navigation LED	MOD	It lights up when the screen where the Modbus Communication settings are displayed and changed is on
Input-Output (I/O) LED	I/O	This LED lights up when the input and output settings of the device are being made
Alarm Navigation LED		It lights up when the screen where you can access the alarm settings is on
Reset Navigation LED	RST	It lights up when the setting screen where Min, Max, Demand values are deleted is on
Info Navigation LED	ⓘ	It lights up when the menu for displaying information such as software, hardware versions, serial number, date, time of the device is on
Relay 1 Output LED	RLY1	It lights up when the relay output is active
Relay 2 Output LED	RLY2	It lights up when the relay output is active

Measurement

Voltage

This screen shows the phase-neutral voltage values for each phase. You can see Min Voltage (Phase-Neutral) and Max Voltage (Phase-Neutral) values by pressing the OK button. Depending on the connection type in the Phase-Neutral voltage (3P3W, 3P3W balance and Aron), this screen will not be displayed.



This screen shows the phase-phase voltage values for each phase. You can see Min Voltage (Phase-Phase) and Max Voltage (Phase-Phase) values by pressing the OK button.



Current

Instantly measured current values for each phase are displayed on this screen. You can see Min Voltage (Phase-Neutral), Max Current (Phase-Neutral), Demand (Phase-Neutral) and Max Demand (Phase-Neutral) values by pressing the OK button.











Neutral Current

This screen shows the calculated neutral current value. You can see the Min and Max values by pressing the OK button. Also depending on the connection type of the neutral current screen (3P3W, 3P3W balance and Aron), this screen will not appear.





Frequency

You can see the operating frequency of the device on this screen.



Cos Phi

You can see cos phi values of each phase separately on this screen.



Total Cos Phi

You can see total cos phi values on this screen.



Total Run Hour

It is the screen on which the run hour of this device is displayed. You can view the time it has worked since the first power-up on the screen. The value on the screen increases by 1 in 3.6 seconds. If you multiply the value on the screen by 3.6, you can reach the total operating time.



Run Hour

This screen works according to the condition of the parameters selected from the settings. It is the counter that will run when the parameters exceed the threshold value entered by the user. The value on the screen increases by 1 in 3.6 seconds. If you multiply the value on the screen by 3.6, you can reach the total operating time.

Parameters (Depends on device)

- Current
- Current demand



Settings

Press and hold OK to access the settings menu. If you wish to do something under the Settings menu or change the settings, press OK to go to menu details and change Product or User settings under the Settings menu. In the Settings menu, the symbols in the right corner of the screen indicate which setting you are in.

User Settings

It is the menu where you can set the Language for your device. You can use the up and down arrow buttons to choose between Turkish, English, German and French.



Security Settings

You can activate and deactivate the password protection with the arrow button in the safety setting. You should select one of the options: Yes/No. If Yes is selected, the password screen will be displayed each time you change the setting. If No is selected, the password screen will not appear.



Password Setting

On this screen, you can set the password that you will use for the security of the device. The current password is entered on the first screen.

If it is entered correctly, the screen for entering the new password will be displayed. The screen for re-entering the password is displayed to confirm the new password. As with all settings, the saving confirmation must be set to yes when exiting the settings for the new password to be active.



Connection Settings

In this screen, you can scroll with the arrow and configure the connection settings.



Connection Type













Frequency





Demand Period (Based on Model)





Voltage Transformer Setting

In this screen, you can configure the voltage transformer settings. If you are using a voltage transformer, you must set the setting to on and then enter the primary and secondary values.















Current Transformer Setting

It is the menu in which the primary and secondary values for the current transformer are entered. You will be prompted to enter CT Primary and CT Secondary values respectively.









Communication Settings

Communication and Modbus RTU settings of the device are made in this menu. Modbus address, bit rate, parity bit settings of the device are made in this menu (For models without communication, this screen will not be available).



Modbus Address: This parameter can be set to a value between 1 and 247. The value set must be unique on the line where the product is found. Otherwise, communication of the line, to which the product is connected, will be disrupted.





Bit Rate: This parameter can be set to one of the following values: 2400, 4800, 9600, 19200, 38400, 57600, 115200 or 256000 bps. The value of this parameter must be the same as the value in the software you use to communicate with the product. Otherwise, you cannot communicate with the product.





Parity Bit: The parity bit can be set to N/A, single or double. The value of this parameter must be the same as the value in the software you use to communicate with the product. Otherwise, you cannot communicate with the product.





Output Settings

On this screen, you can configure the output settings of the device.

Relay 1

Press the OK button to configure the relay setting.



Then select the setting parameter.



Setting parameter can be selected as Relay or RS-485. If the setting is selected as a relay, the relay is activated when an alarm condition occurs (if the alarm output is assigned as a relay). If RS-485 is selected, the relay can be switched on and off via MODBUS.





Alarm Settings

User Mode

It is the screen where the user mode is selected. The user mode can be selected as simple or advanced. In the advanced user mode, the following parameters are activated (varies by parameter). Hysteresis is only available in the measurement parameters.

- T_{on}
- T_{off}
- Hysteresis
- Output function





Press the OK button to enter the alarm settings.



Custom alarm

Press the OK button to program a custom alarm.



Then select a parameter. Parameter selection varies by device model. You can set alarm by selecting Voltage, Current, Current demand, Frequency, Cos Phi, Total work time and work time.
For example, the voltage alarm setup is as follows.





Press the OK button to make an operation selection.



Select the large or small operation.





Then press the OK button and enter a value.





Enter the hysteresis value and press the OK button.





Enter the on delay and press the OK button.





Enter the off delay and press the OK button.





Select the output feature on the device with output options.



When this option is selected, there is no output on the device.



When Rly 2 is selected, relay number 2 is activated in case of alarm.



When Rly 1 is selected, relay number 1 is activated in case of alarm.



Press the OK button to select the function.



In standard mode, the relay is activated when an alarm occurs.



In Latch mode, the relay is activated when the alarm actuates, but when the alarm disappears, the relay remains on. You must hold the down button to return the relay to its normal state.



In Inverse mode, the relay is released if it is activated, or it is activated if it is released.



Reset

On this screen, you can reset the device to factory settings by pressing the OK button.





On this screen, you can reset the work time by pressing the OK button.

On this screen, you can reset the MAX Demand by pressing the OK button.



On this screen, you can reset the MAX by pressing the OK button.



On this screen, you can reset the MIN by pressing the OK button.



On this screen, you can reset the work time by pressing the OK button. The total work time cannot be reset.



Info

In the Info menu, you can view the following information about the device.

Hardware Version





Software Version





Serial No





Run Hour

In this menu, you can set the work time for Current or Current Demand.









Alarm Messages

When an alarm occurs on your device, the alarm appears on the screen. You can delay the alarms by pressing the OK button for the duration of the delay time setting. When critical alarms occur, Relay 1 is activated.

No Voltage is measured

It occurs when any phase has no voltage. The number of the voltage-free phase is shown on the screen. In addition, the bulb of the voltage-free phase in the signal bulbs does not light upon the device.



Current is not measured

It occurs when any phase has no current. The number of the current-free phase is shown on the screen.



Phase Sequence

It occurs when the phases are not connected in the correct order.



Custom Alarm

It appears on the screen when any of 8 special alarms actuate. The alarm number is displayed on the screen.