

## Model Number

**RC10-14-N0**

## Features

- **10 mm inside diameter**

## Technical Data

| | | |
|---|---|---|
| **General specifications** | | |
| Switching element function | | NAMUR, NC |
| Installation | | |
| Output polarity | | NAMUR |
| Inside diameter | | 10 mm |
| Measuring cylinder | | 9S20K |
| Diameter | | 2.5 mm |
| Length | | 4 mm |
| **Nominal ratings** | | |
| Nominal voltage | $U_o$ | 8.2 V ($R_i$ approx. 1 kΩ) |
| Operating voltage | $U_B$ | 5 ... 25 V |
| Switching frequency | f | 0 ... 2000 Hz |
| Suitable for 2:1 technology | | yes , Reverse polarity protection diode not required |
| Current consumption | | |
| Measuring plate not detected | | ≥ 3 mA |
| Measuring plate detected | | ≤ 1 mA |
| **Functional safety related parameters** | | |
| $MTTF_d$ | | 6150 a |
| Mission Time ($T_M$) | | 20 a |
| Diagnostic Coverage (DC) | | 0 % |
| **Ambient conditions** | | |
| Ambient temperature | | -20 ... 65 °C (-4 ... 149 °F) |
| **Mechanical specifications** | | |
| Connection type | | cable PVC , 2 m |
| Core cross-section | | 0.14 $mm^2$ |
| Housing material | | PBT |
| Degree of protection | | IP67 |
| **General information** | | |
| Use in the hazardous area | | see instruction manuals |
| Category | | 2G |
| **Compliance with standards and directives** | | |
| Standard conformity | | |
| NAMUR | | EN 60947-5-6:2000<br>IEC 60947-5-6:1999 |
| Electromagnetic compatibility | | NE 21:2007 |
| Standards | | EN 60947-5-2:2007<br>IEC 60947-5-2:2007 |
| **Approvals and certificates** | | |
| FM approval | | |
| Control drawing | | 116-0165F |
| UL approval | | cULus Listed, General Purpose |
| CSA approval | | cCSAus Listed, General Purpose |

## Dimensions

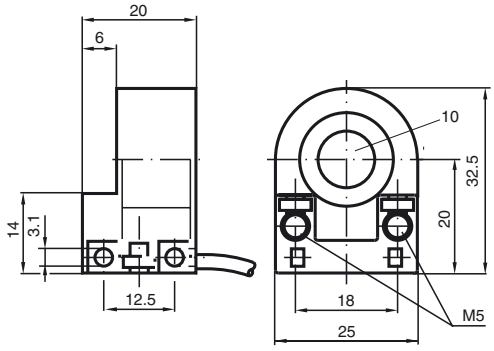


## Electrical Connection

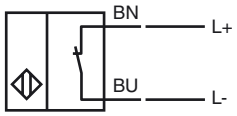


Release date: 2015-04-06 17:22 Date of issue: 2015-04-07 095912_eng.xml

**ATEX 2G**

| | |
|---|---|
| Instruction | **Manual electrical apparatus for hazardous areas** |
| **Device category 2G** | for use in hazardous areas with gas, vapour and mist |
| EC-Type Examination Certificate | PTB 99 ATEX 2128 X |
| CE marking | CE 0102 |
| ATEX marking | Ex II 2G Ex ia IIC T6…T1 Gb |
| Directive conformity | 94/9/EG |
| Standards | EN 60079-0:2012, EN 60079-11:2012<br>Ignition protection "Intrinsic safety"<br>Use is restricted to the following stated conditions |
| Appropriate type | RC10-...-N0... |
| Effective internal capacitance $C_i$ | ≤ 150 nF ; a cable length of 10 m is considered. |
| Effective internal inductance $L_i$ | ≤ 100 µH ; a cable length of 10 m is considered. |
| General | The apparatus has to be operated according to the appropriate data in the data sheet and in this instruction manual. The EC-Type Examination Certificate has to be observed. The special conditions must be adhered to! |
| Ambient temperature | The temperature ranges, according to temperature class, are given in the EC-Type Examination Certificate. |
| Installation, commissioning | Laws and/or regulations and standards governing the use or intended usage goal must be observed. The intrinsic safety is only assured in connection with an appropriate related apparatus and according to the proof of intrinsic safety. Install the device in such a way that the resin surface is not exposed to mechanical hazards. |
| Maintenance | No changes can be made to apparatus, which are operated in hazardous areas. Repairs to these apparatus are not possible. |

Release date: 2015-04-06 17:22 Date of issue: 2015-04-07 095912_eng.xml



Refer to “General Notes Relating to Pepperl+Fuchs Product Information”.
Pepperl+Fuchs Group www.pepperl-fuchs.com
USA: +1 330 486 0001 fa-info@us.pepperl-fuchs.com
Germany: +49 621 776 4411 fa-info@de.pepperl-fuchs.com
Singapore: +65 6779 9091 fa-info@sg.pepperl-fuchs.com
PEPPERL+FUCHS SENSING YOUR NEEDS