Your Expert Partner for **Human Machine Interfaces**

Actuator

Distribution by
Rs-online

51-
252.026

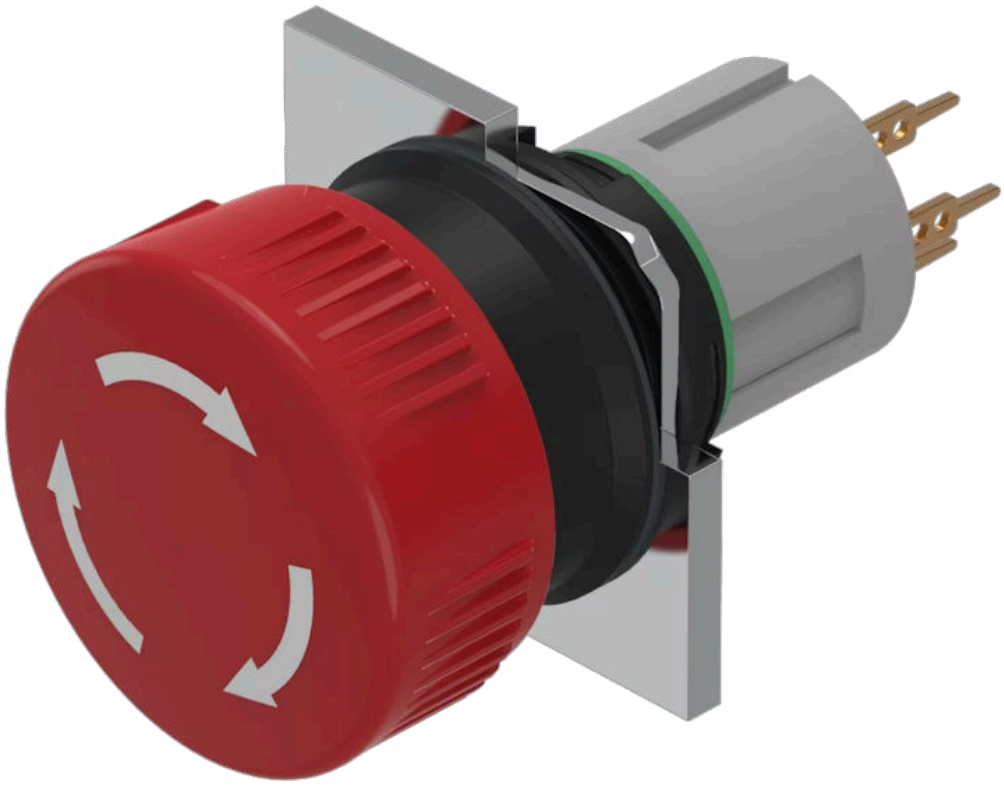

https://rs-online.eao.com/component/51-252.02...

Your product:



51-252.026
Actuator

FRONT

Front dimension:	Ø 24,5 mm
Front form:	Round

MOUNTING

Design:	Raised
Mounting type:	Panel mounting

OPERATING-/INDICATION PART

Lens colour:	Red
Lens material:	Plastic
Lens illumination:	Non illuminated
Lens shape:	Mushroom-head
Lens optics:	opaque

ELECTRICAL CHARACTERISTICS

Switching voltage and switching current:	100 mA at 42 VAC/VDC
Contacts:	2 NC
Switching rating:	42 V AC @ 0,1 A

MECHANICAL CHARACTERISTICS

Terminal:	Universal terminal, 2 x 0.5 mm
Contact material:	Gold

Switching action:	Maintained
Switching system:	Low-level element
Switching system:	This low-level switching element was designed for switching low powers in electronic circuits. The mechanism assures reliable switching of loads ranging from a few µA/µV up to 100 mA/ 42 VAC/DC. Single-break momentary contact, as normally open or normally closed with 4 independent points of contact. 2 momentary contactsper switching element; combination of normally open and normally closed is possible. Special features are the long life, extremely short rebound time and stable contact resistance.
Release type:	Twist to unlock
Mechanical lifetime:	1 Mil. cycles of operation (RCC/RPB)
Operating force:	18 ... 21 N (depending on the switching element)
Operating Travel:	3 mm
Tightening torque:	Fixing nut max. 0.5 Nm
Terminal details 1:	The universal terminals permit these units to be mounted on printed circuit boards (PCB). These terminals can also be used as soldering or plug-in terminals. For these terminals we can also supply a plug-in base which, when soldered on to the board, enables the switch to be plugged in.
Weight:	0.015 kg

AMBIENT CONDITION

IP front protection:	IP65, according to DIN EN 60529
Operating temperature:	– 25 °C ... + 55 °C
Storage temperature:	– 40 °C ... + 85 °C

CERTIFICATE

REACH:	REACH compliant
RoHS:	RoHS compliant

OTHER

Short Description:	Actuator, Ø 24,5 mm, Mushroom-head, Non illuminated, Red, Plastic, opaque, Round, 2 NC, Maintained, Universal terminal, 2 x 0.5 mm, IP65, according to DIN EN 60529, Twist to unlock
Housing colour:	Black
Hints:	Marking arrows
Wiring diagrams:	

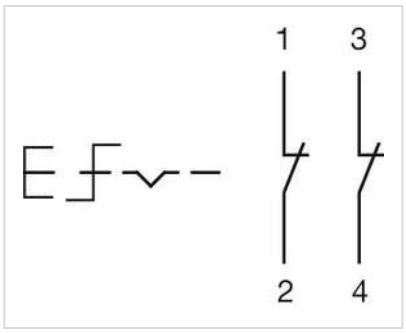

Mounting cut-outs:

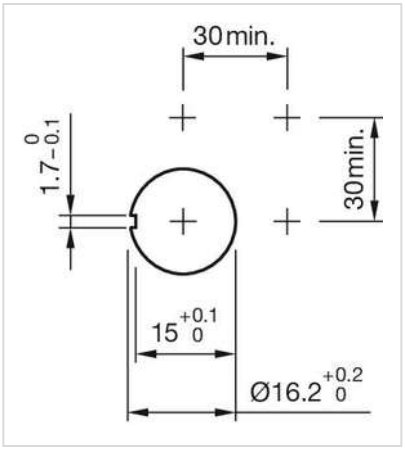

Dimension drawings:

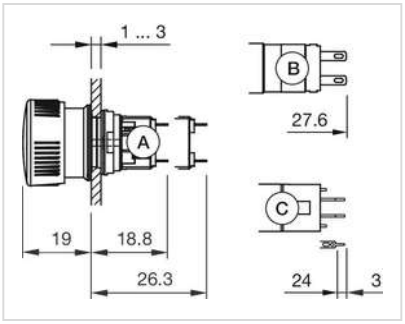

A = Solder terminal
B = Plug-in terminal 2.8 mm x 0.5 mm
C = Universal terminal 2.0 mm x 0.5 mm