finder®
SWITCH TO THE FUTURE

36
SERIES

Miniature PCB relays
10 A

- Burners, boilers and furnaces
- Jacuzzis and hot tubs
- Washing machines
- Hi-Fi systems
- Refrigerators
- Automation for blinds, grilles and shutters
- Electronic circuit boards
- Electronic kits

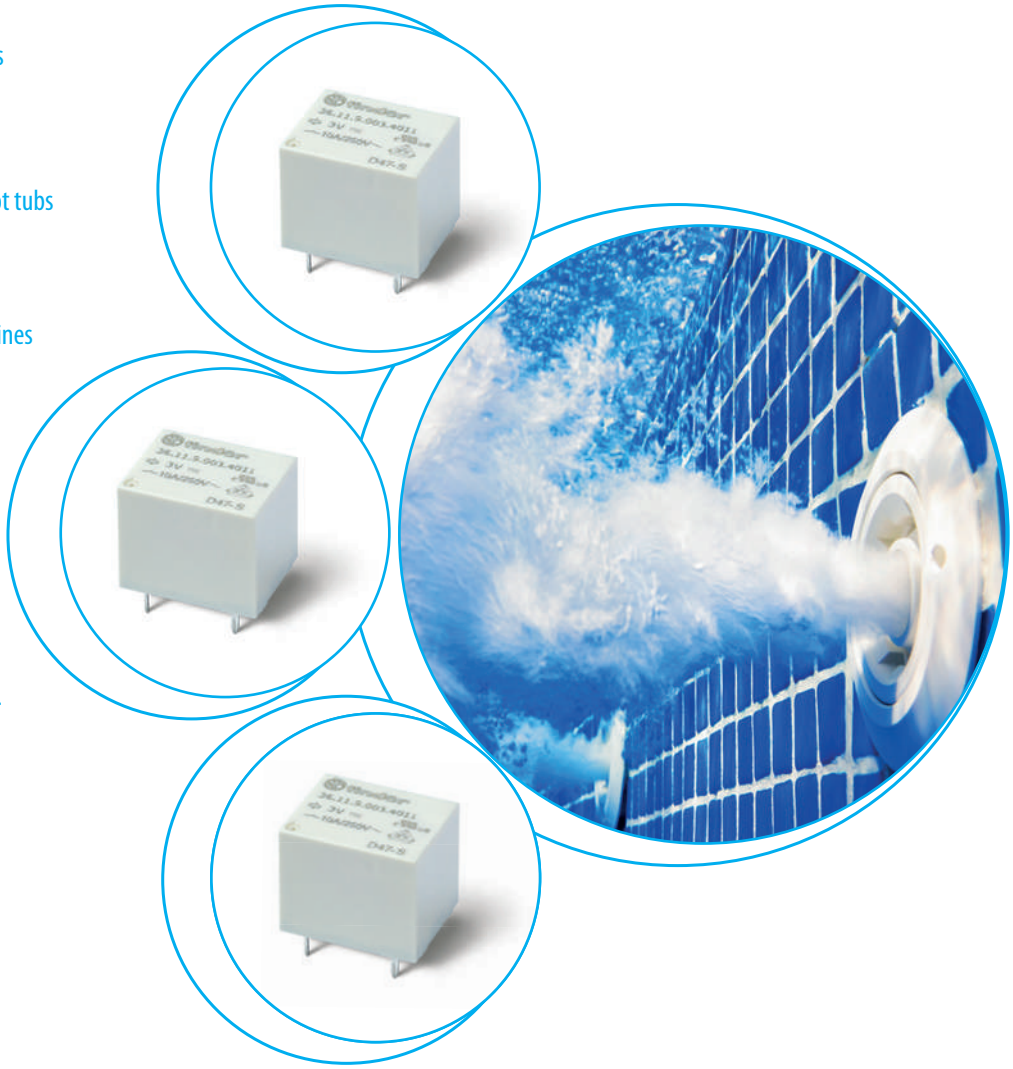

FINDER reserves the right to alter characteristics at any time without notice. FINDER assumes no liability for damage to persons or property, caused as a result of the incorrect use or application of its products.

Printed circuit mount 10 A relay

- New smaller size
- 1 Pole changeover contacts
- Miniature - "Sugar cube" package
- DC coil - 360 mW
- Wash tight: RT III
- Cadmium Free contact material
- RoHS conform

36.11-4011



- 1 CO (SPDT), 10 A
- Sugar cube size
- PCB mount

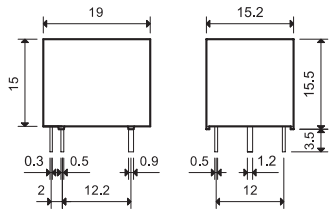

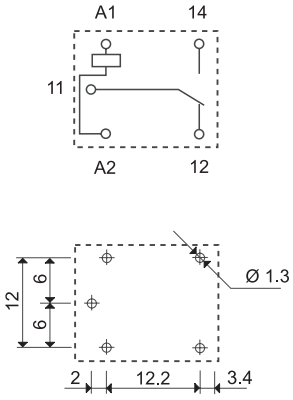

Copper side view

Contact specification		
Contact configuration		1 CO (SPDT)
Rated current/Maximum peak current	A	10/15 (NO) - 5/10 (NC)
Rated voltage/ Maximum switching voltage	V AC	250/277
Rated load AC1	VA	2500 (NO) - 1250 (NC)
Rated load AC15 (230 V AC)	VA	500 (NO)
Single phase motor rating (230 V AC)	kW	0.37 (NO)
Breaking capacity DC1: 28 V	A	10 (NO)
Minimum switching load	mW (V/mA)	500 (5/100)
Standard contact material		$AgSnO_2$
Coil specification		
Nominal voltage (U_N)	V AC (50/60 Hz)	—
	V DC	3 - 5 - 6 - 9 - 12 - 18 - 24 - 48
Rated power AC/DC	VA (50 Hz)/W	—/0.36
Operating range	AC	—
	DC	$(0.75…1.3)U_N$
Holding voltage	AC/DC	—/0.5 U_N
Must drop-out voltage	AC/DC	—/0.1 U_N
Technical data		
Mechanical life AC/DC	cycles	—/$10 \cdot 10^6$
Electrical life at rated load AC1	cycles	$50 \cdot 10^3$
Operate/release time	ms	10/5
Insulation between coil and contacts (1.2/50 µs)	kV	3
Dielectric strength between open contacts	V AC	750
Ambient temperature range	°C	–40…+85
Environmental protection		RT III
Approvals (according to type)		EAC cULus VDE

I-2017, www.findernet.com

Ordering information

A

Example: 36 series miniature PCB relay, 1 CO (SPDT) - 10 A contacts, 12 V DC coil.

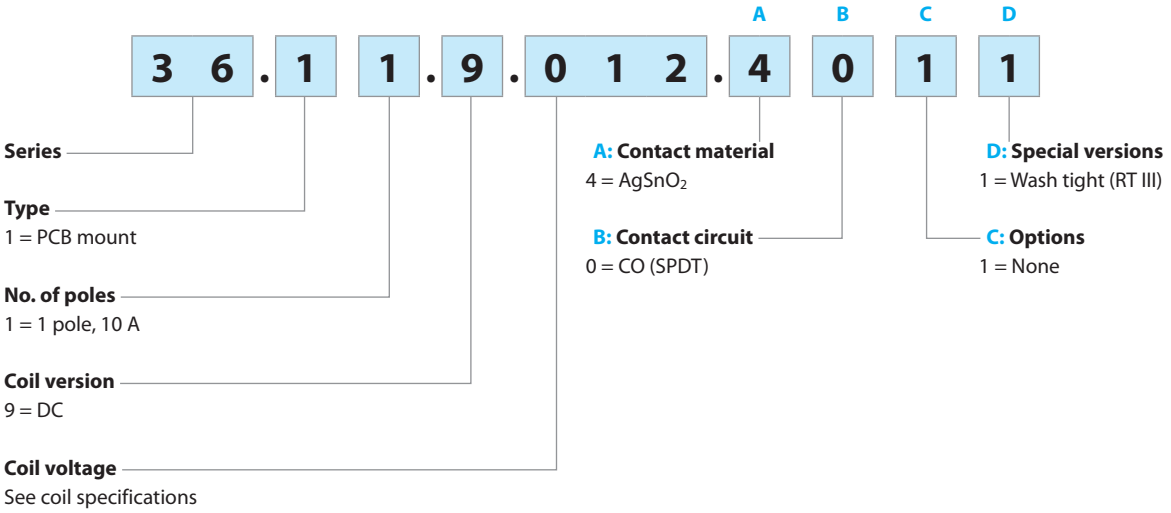

Selecting features and options: only combinations in the same row are possible.
Preferred selections for best availability are shown in **bold**.

Type	Coil version	A	B	C	D
36.11	DC	**4**	**0**	**1**	**1**

Technical data

Insulation according to EN 61810-1			
Nominal voltage of supply system		V AC	230/400
Rated insulation voltage		V AC	250
Pollution degree			2
Insulation between coil and contact set			
Type of insulation			Basic
Overvoltage category			II
Rated impulse voltage		kV (1.2/50 µs)	4
Dielectric strength		V AC	2500
Insulation between open contacts			
Type of disconnection			Micro-disconnection
Dielectric strength		V AC/kV (1.2/50 µs)	750/1.5
Other data			
Shock resistance		g	10
Bounce time: NO/NC		ms	1/6
Vibration resistance (5…55 Hz): NO/NC		g	14/8
Power lost to the environment			
	without contact current	W	0.4
	with rated current	W	1.4
Recommended distance between relays mounted on PCB		mm	≥ 5

I-2017, www.findernet.com

Contact specification

F 36 - Electrical life (AC) v contact current

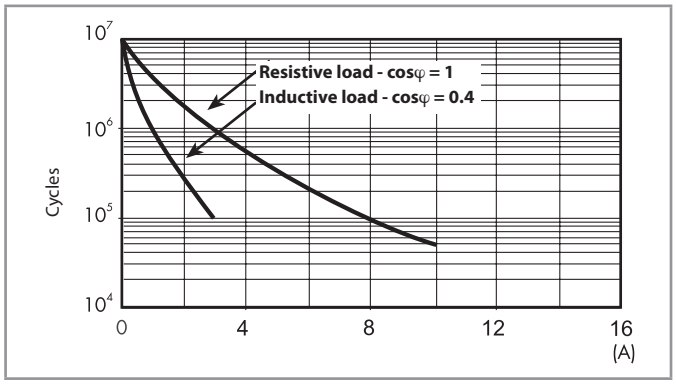

Coil specifications

DC coil data

Nominal voltage U_N	Coil code	Operating range U_{min}	Operating range U_{max}	Resistance R	Rated coil consumption I at U_N
V		V	V	Ω	mA
3	**9**.003	2.2	3.9	25	120
5	**9**.005	3.7	6.5	70	72
6	**9**.006	4.5	7.8	100	60
9	**9**.009	6.7	11.7	225	40
12	**9**.012	9	15.6	400	30
18	**9**.018	13.5	23.4	900	20
24	**9**.024	18	31.2	1600	15
48	**9**.048	36	62.4	6400	7.5

R 36 - DC coil operating range v ambient temperature

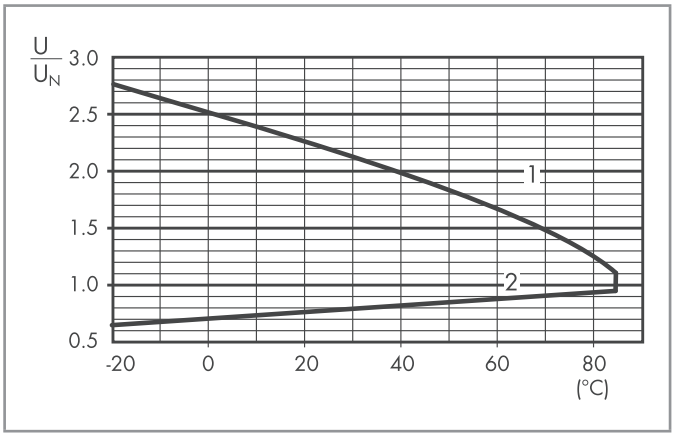

1 - Max. permitted coil voltage.
2 - Min. pick-up voltage with coil at ambient temperature.