Filter pressure regulator, Series AS5-FRE

R412009209

AVENTICS Series AS5 Air Preparation Units

The AVENTICS Series AS5 is a modular, versatile maintenance unit for universal application. This Series offers compact dimensions, is highly efficient, lightweight and easy-to-use. The AVENTICS Series AS guarantees reliability, safety, and efficiency with a simplified assembly and maintenance efforts.



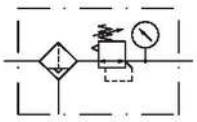

Technical data

Industry	Industrial
Parts	Filter pressure regulator
Reservoir	reservoir, polycarbonate, with PA protective guard
Port	G 1
Nominal flow Qn	14000 l/min
Filter porosity	5 µm
Condensate drain	semi-automatic, open without pressure
Pressure gauge	with pressure gauge
Min. working pressure	1.5 bar
Max. working pressure	16 bar
Min. ambient temperature	-10 °C
Max. ambient temperature	50 °C
Min. regulation range	0.5 bar
Max. regulation range	8 bar
Lock type	for padlocks
Type	1-part
Type	Can be assembled into blocks
Pressure supply	single
Mounting orientation	vertical

Filter pressure regulator, Series AS5-FRE

R412009209

Regulator type	Diaphragm-type pressure regulator
Regulator function	with relieving air exhaust
Max. Internal air consumption	1.5 l/min
Filter element	exchangeable
Filter reservoir volume	87 cm³
Max. achievable compressed air class acc. to ISO 8573-1:2010	6 : 7 : -
Medium	Compressed air Neutral gases
Weight	1.08 kg

Material

Housing material	Polyamide
Seal material	Acrylonitrile butadiene rubber
Material front plate	Acrylonitrile butadiene styrene
Material threaded bushing	Die cast zinc
Material reservoir	Polycarbonate
Material protective guard	Polyamide
Material filter insert	Polyethylene
Part No.	R412009209

Technical information

The pressure dew point must be at least 15 °C less than ambient and medium temperature and may not exceed 3 °C.

Note: Polycarbonate reservoirs are susceptible to solvents, supplementary information can be found at "Customer information".

Nominal flow Qn with secondary pressure p2 = 6 bar at Δp = 1 bar

A change in the flow direction (from air supply on the left to air supply on the right) occurs by rotating installation by 180° about the vertical axis. Please see the operating instructions for further details.

Also suitable for separation of fluid oil or water due to the design.

Pressure gauge enclosed separately

Filter pressure regulator, Series AS5-FRE

R412009209

Dimensions

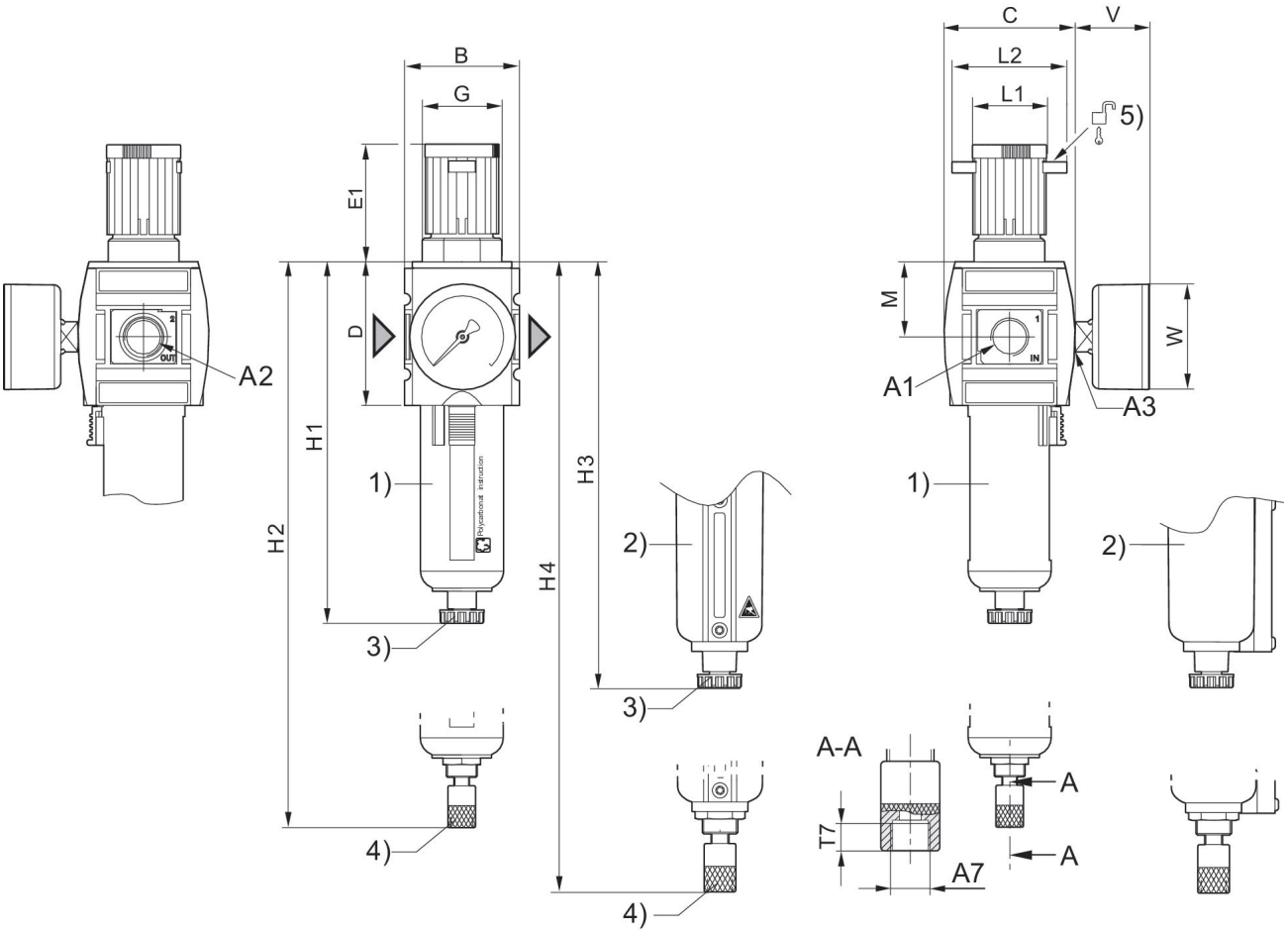

A1 = input A2 = output A3 = pressure gauge connection
A7 = condensate drain
1) Plastic reservoir and protective guard with window
2) Metal reservoir with level indicator
3) Semi-automatic condensate drain
4) Fully automatic condensate drain
5) Mounting option for padlocks, max. shackle Ø 8

Dimensions in mm

Part No.	A1	A2	A3	A7	B	C	D	E1	G
R412009200	G 3/4	G 3/4	G 1/4	G 1/8	85	103	109	75	M50x1,5
R412009201	G 3/4	G 3/4	G 1/4	G 1/8	85	103	109	75	M50x1,5
R412009202	G 3/4	G 3/4	G 1/4	G 1/8	85	103	109	75	M50x1,5
R412009206	G 3/4	G 3/4	G 1/4	G 1/8	85	103	109	75	M50x1,5
R412009207	G 3/4	G 3/4	G 1/4	G 1/8	85	103	109	75	M50x1,5
R412009208	G 3/4	G 3/4	G 1/4	G 1/8	85	103	109	75	M50x1,5
R412009209	G 1	G 1	G 1/4	G 1/8	85	103	109	75	M50x1,5
R412009210	G 1	G 1	G 1/4	G 1/8	85	103	109	75	M50x1,5
R412009211	G 1	G 1	G 1/4	G 1/8	85	103	109	75	M50x1,5
R412009215	G 1	G 1	G 1/4	G 1/8	85	103	109	75	M50x1,5
R412009216	G 1	G 1	G 1/4	G 1/8	85	103	109	75	M50x1,5

Filter pressure regulator, Series AS5-FRE

R412009209

Part No.	A1	A2	A3	A7	B	C	D	E1	G
R412009217	G 1	G 1	G 1/4	G 1/8	85	103	109	75	M50x1,5
R412009175	G 3/4	G 3/4	G 1/4	G 1/8	85	103	109	75	M50x1,5
R412009176	G 3/4	G 3/4	G 1/4	G 1/8	85	103	109	75	M50x1,5
R412009177	G 3/4	G 3/4	G 1/4	G 1/8	85	103	109	75	M50x1,5
R412009193	G 3/4	G 3/4	G 1/4	G 1/8	85	103	109	75	M50x1,5
R412009194	G 3/4	G 3/4	G 1/4	G 1/8	85	103	109	75	M50x1,5
R412009195	G 3/4	G 3/4	G 1/4	G 1/8	85	103	109	75	M50x1,5
R412009181	G 3/4	G 3/4	G 1/4	G 1/8	85	103	109	75	M50x1,5
R412009182	G 3/4	G 3/4	G 1/4	G 1/8	85	103	109	75	M50x1,5
R412009183	G 3/4	G 3/4	G 1/4	G 1/8	85	103	109	75	M50x1,5
R412009184	G 1	G 1	G 1/4	G 1/8	85	103	109	75	M50x1,5
R412009185	G 1	G 1	G 1/4	G 1/8	85	103	109	75	M50x1,5
R412009186	G 1	G 1	G 1/4	G 1/8	85	103	109	75	M50x1,5
R412009192	G 1	G 1	G 1/4	G 1/8	85	103	109	75	M50x1,5
R412009191	G 1	G 1	G 1/4	G 1/8	85	103	109	75	M50x1,5
R412009190	G 1	G 1	G 1/4	G 1/8	85	103	109	75	M50x1,5
R412009196	G 1	G 1	G 1/4	G 1/8	85	103	109	75	M50x1,5
R412009197	G 1	G 1	G 1/4	G 1/8	85	103	109	75	M50x1,5
R412009198	G 1	G 1	G 1/4	G 1/8	85	103	109	75	M50x1,5

Part No.	H1	H2	H3	H4	L1	L2	M	T7	V
R412009200	250	206	193.5	210.5	41	60	58	8.5	38
R412009201	250	206	193.5	210.5	41	60	58	8.5	38
R412009202	250	206	193.5	210.5	41	60	58	8.5	38
R412009206	250	206	193.5	210.5	41	60	58	8.5	38
R412009207	250	206	193.5	210.5	41	60	58	8.5	38
R412009208	250	206	193.5	210.5	41	60	58	8.5	38
R412009209	250	206	193.5	210.5	41	60	58	8.5	38
R412009210	250	206	193.5	210.5	41	60	58	8.5	38
R412009211	250	206	193.5	210.5	41	60	58	8.5	38
R412009215	250	206	193.5	210.5	41	60	58	8.5	38
R412009216	250	206	193.5	210.5	41	60	58	8.5	38
R412009217	250	206	193.5	210.5	41	60	58	8.5	38
R412009175	250	206	193.5	210.5	41	60	58	8.5	38
R412009176	250	206	193.5	210.5	41	60	58	8.5	38
R412009177	250	206	193.5	210.5	41	60	58	8.5	38
R412009193	250	206	193.5	210.5	41	60	58	8.5	38
R412009194	250	206	193.5	210.5	41	60	58	8.5	38
R412009195	250	206	193.5	210.5	41	60	58	8.5	38
R412009181	250	206	193.5	210.5	41	60	58	8.5	38
R412009182	250	206	193.5	210.5	41	60	58	8.5	38
R412009183	250	206	193.5	210.5	41	60	58	8.5	38
R412009184	250	206	193.5	210.5	41	60	58	8.5	38
R412009185	250	206	193.5	210.5	41	60	58	8.5	38
R412009186	250	206	193.5	210.5	41	60	58	8.5	38
R412009192	250	206	193.5	210.5	41	60	58	8.5	38
R412009191	250	206	193.5	210.5	41	60	58	8.5	38

Filter pressure regulator, Series AS5-FRE

R412009209

Part No.	H1	H2	H3	H4	L1	L2	M	T7	V
R412009190	250	206	193.5	210.5	41	60	58	8.5	38
R412009196	250	206	193.5	210.5	41	60	58	8.5	38
R412009197	250	206	193.5	210.5	41	60	58	8.5	38
R412009198	250	206	193.5	210.5	41	60	58	8.5	38

Part No.	W
R412009200	63
R412009201	63
R412009202	63
R412009206	63
R412009207	63
R412009208	63
R412009209	63
R412009210	63
R412009211	63
R412009215	63
R412009216	63
R412009217	63
R412009175	63
R412009176	63
R412009177	63
R412009193	63
R412009194	63
R412009195	63
R412009181	63
R412009182	63
R412009183	63
R412009184	63
R412009185	63
R412009186	63
R412009192	63
R412009191	63
R412009190	63
R412009196	63
R412009197	63
R412009198	63

Flow rate characteristic (setting range p2: 0.5 - 8 bar)

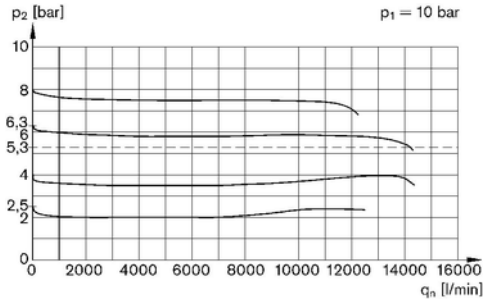

p1 = Working pressure
p2 = Secondary pressure
qn = Nominal flow

Pressure characteristics curve

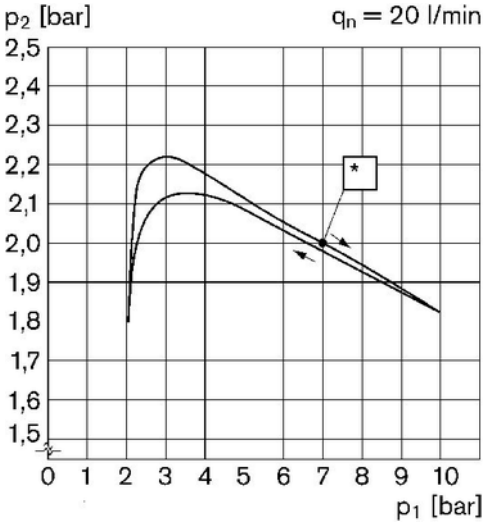

p1 = Working pressure
p2 = Secondary pressure
qn = Nominal flow
* starting point

Accessories overview

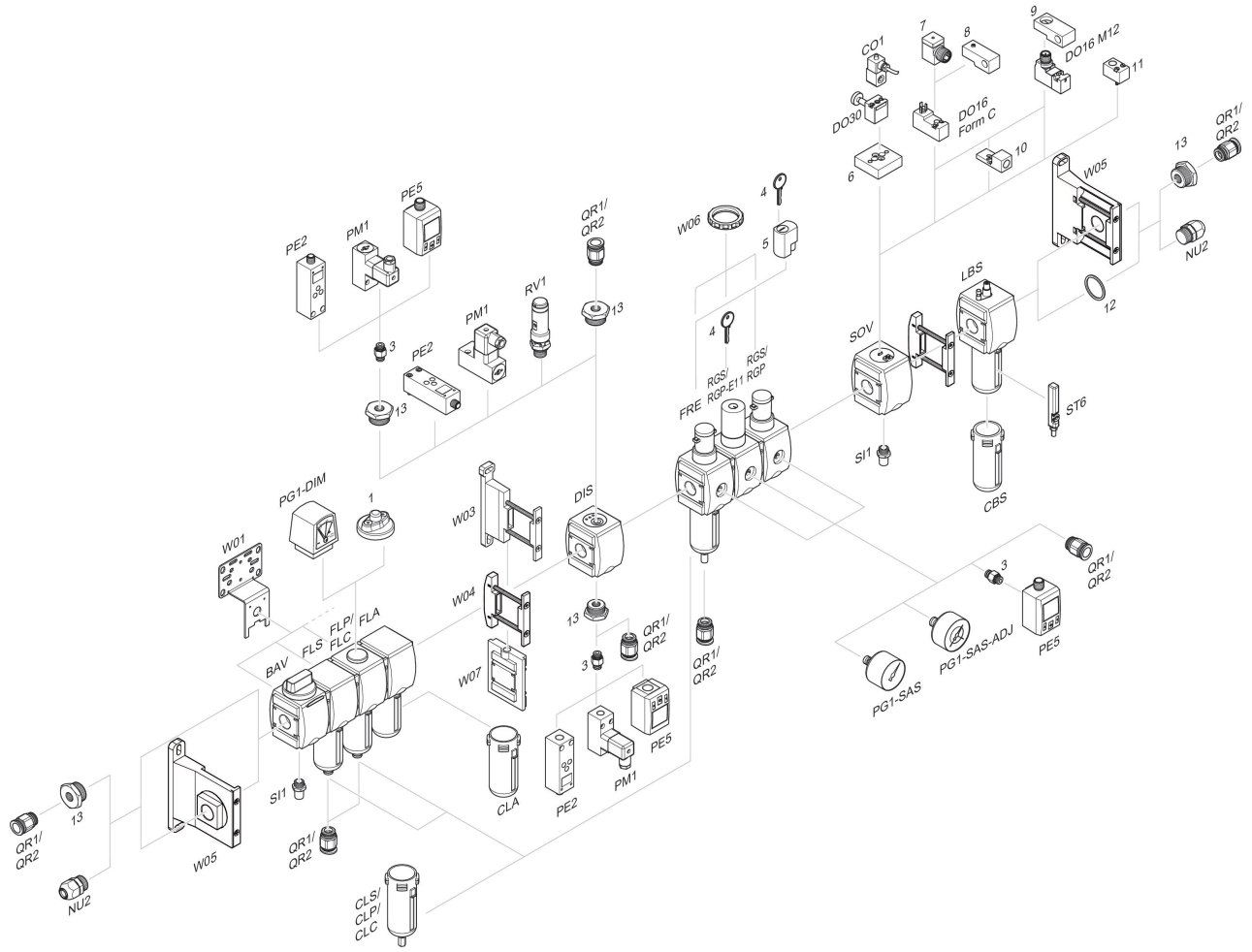

1 = contamination display 3 = Double nipple 4 = Key for E11 locking 5 = mortise lock 6 = Transition plate DO30 7 = Adapter, Series CON-VP 8 = Mounting aid DO16, form C 9 = Mounting aid DO16, M12 10 = Adapter for external pilot air 11 = Adapter pneumatic operation 12 = Sealing ring 13 = Reducing nipple