Brand of NTN Group

# Technical data

## ESPP205

Bearing units



Sheet metal housing, radial insert ball bearing with eccentric locking collar, single lip seal

## KIT CONTENT

**ES205G2, PP205**

## VISUAL (S)

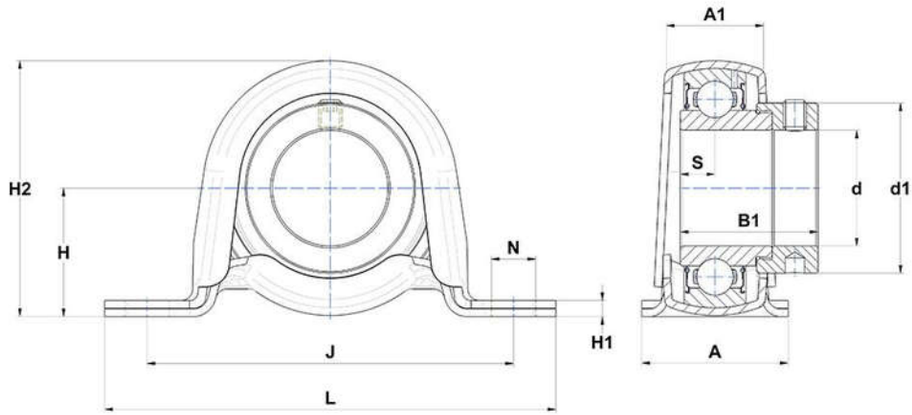


## PRODUCT DEFINITION

| | |
|---|---|
| **Brand** | SNR |
| **A - Housing width** | 31,7 mm |
| **A1 - Housing top width** | 21,6 mm |
| **B - Width of Inner Ring** | 21,4 mm |
| **d - Shaft diameter** | 25 mm |
| **d1 - Outer dia of eccent. Lock. collar / nut of adapter sleeve** | 37,4 mm |

# ESPP205
Bearing units

| PRODUCT DEFINITION | |
|---|---|
| **H - Distance mounting base to centerline spheric. seating diam.** | 28,6 mm |
| **H1 - Housing foot height** | 2,8 mm |
| **H2 - Housing height** | 55,8 mm |
| **J - Mounting holes distance** | 86 mm |
| **L - Housing length** | 108 mm |
| **N - Mounting hole dimension** | 11 mm |
| **S - Distance front side/bearing centre** | 7,5 mm |

| PRODUCT PERFORMANCE | |
|---|---|
| **C - Dynamic load rating** | 14000000 mN |
| **C0 - Static load rating** | 7880000 mN |
| **Operating temperature min.** | 253,15 °K |
| **Operating temperature max.** | 373,15 °K |

| OTHER FEATURES | |
|---|---|
| **Mass** | 0,32 kg |
| **Recommended tightening torque for set screw** | 5.5 N-m |