TD2261

TD-250CFED06-A-ZVG/US

Temperature sensors

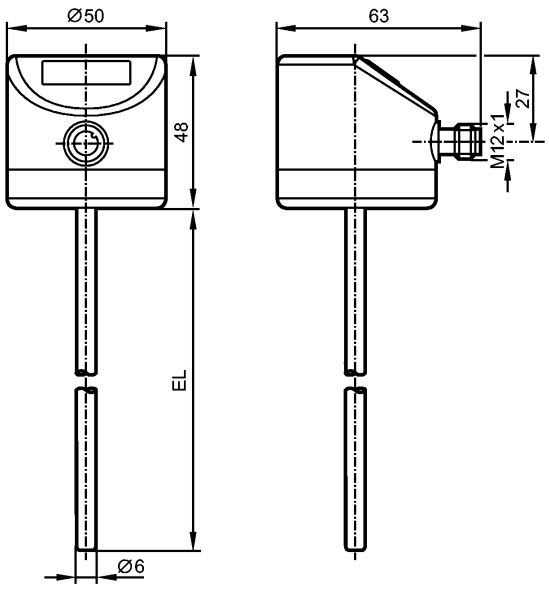

EL = Installation length

EC 1935/2004 IO-Link

Product characteristics
Temperature Transmitter with Display
Process connection: Ø 6 mm
Installation length EL: 250 mm
Analog output
7-segment LED display (4 digits)
Measuring range: -50...150 °C / -58...302 °F
Measuring element: 1 x Pt 1000, to DIN EN 60751, class A
Factory setting: -10...150 °C

Application		
Application		liquids and gases
Pressure rating	[bar]	160
Vacuum resistance	[mbar]	-1000

Electrical data		
Electrical design		DC
Operating voltage	[V]	18...32 DC; cULus - Class 2 source required
Current consumption	[mA]	< 50
Protection class		III
Reverse polarity protection		yes

Outputs		
Output		Analog output
Short-circuit protection		yes
Overload protection		yes
Analog output		4...20 mA
Max. load	[Ω]	300

Measuring / setting range		
Measuring range	-50...150 °C	-58...302 °F
Factory setting	-10...150 °C	

TD2261

TD-250CFED06-A-ZVG/US

Temperature sensors

Resolution		
Analog output	[K]	≤ 0.04
Display	[K]	0.1
Accuracy / deviations		
Analog output	[K]	± 0.3 + (± 0.1 % MS)
Temperature coefficients (in % of the span per 10 K)		0.1
Reaction times		
Power-on delay time	[s]	2
Dynamic response	T05 / T09 [s]	1 / 3
Interfaces		
IO-Link Device		
Transfer type		COM2 (38.4 kBaud)
IO-Link revision		1.1
Environment		
Ambient temperature	[°C]	-25...80
Storage temperature	[°C]	-40...100
Protection		IP 67 / IP 68 / IP 69K
Tests / approvals		
EMC		DIN EN 61000-6-2 DIN EN 61000-6-3
Shock resistance		DIN IEC 68-2-27: 50 g (11 ms)
Vibration resistance		DIN IEC 68-2-6: 10 g (10...2000 Hz)
MTTF	[Years]	407
UL approval number		K001
Mechanical data		
Process connection		Ø 6 mm
Materials (wetted parts)		stainless steel 316L / 1.4404; surface characteristics Ra: < 0.6
Probe diameter	[mm]	6
Installation length EL	[mm]	250
Housing materials		housing: stainless steel 316L / 1.4404
Weight	[kg]	0.251
Displays / operating elements		
Display		7-segment LED display (4 digits) Display unit / status °C / °F
Electrical connection		
Connection		M12 connector

Wiring



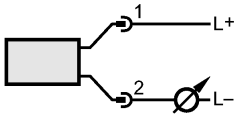

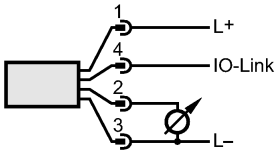

Accessories

TD2261

TD-250CFED06-A-ZVG/US

Temperature sensors

Accessories (included)	Thermowell_Welding - 1/2NPS - EL300

Remarks

Remarks	MS = set measuring span
Pack quantity [piece]	1