

Base for connection to SmartWire-DT

Part no.	**SL4-SWD**
Article no.	**171311**
Catalog No.	**SL4-SWD**

Delivery programme

Product range			SL4 signal towers
Basic function			Base module
Product range			SmartWire-DT slave
Subrange			SmartWire-DT Signal towers
Connection technique			Blade terminal SWD4-8MF2
Mounting type			for horizontal mounting
Fitted with			Base with base adapter for slipping onto place (rapid mounting and wiring system) including cover
Description			External power supply connectable (24 V DC) Configurable with SWD-Assist (planning and ordering help) Further technical data, see manual MN05006001Z.
Tube length			100 mm
Number of modules			max. 5 modules max. 0.3 A per module
Colour			
			black Aluminum color tube
			
For use with			SL4-L-… SL4-BL-… SL4-FL-… SL4-AP-...
Connection to SmartWire-DT			yes

Approvals

Product Standards	IEC/EN 60947-5-1; UL 508; CSA-C22.2 No. 14-10; CSA-C22.2 No. 94-91; CE marking
North America Certification	Request filed for UL and CSA
Degree of Protection	UL Type 4, 4X, 13

General

Standards			IEC/EN 60947-5-1
Climatic proofing			Damp heat, constant, to IEC 60068-2-78 Damp heat, cyclic, to IEC 60069-2-30
Mounting position			As required
Mechanical shock resistance		g	> 15 according to IEC 60068-2-27 Shock duration 11 ms Sinusoidal
IEC degree of protection			IP66 IEC/EN 60529
Protection type UL			Type 4, 4X, 13
Cap colour			
			black Aluminum color tube
Ambient temperature		°C	-30 - +60
Number of signal elements			Max. 5 with standard base Max. 10 with base for mounting on both sides

Technical data ETIM 5.0

Low-voltage industrial components (EG000017) / Connection module for signal tower (EC001152)			
Electric engineering, automation, process control engineering / Low-voltage switch technology / Command and alarm device / Signal column element, connection module (ecl@ss8-27-37-12-32 [AKF050010])			
Connection type auxiliary circuit			Spring clamp connection
Tube mounting possible			No
Bracket mounting possible			Yes
Floor mounting possible			Yes
Colour			-
Suitable for AS interface			No

Dimensions

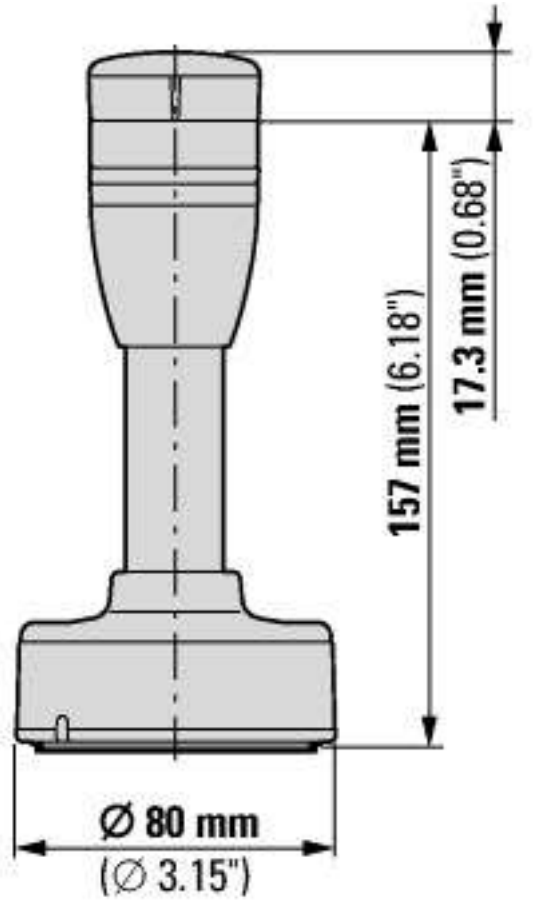

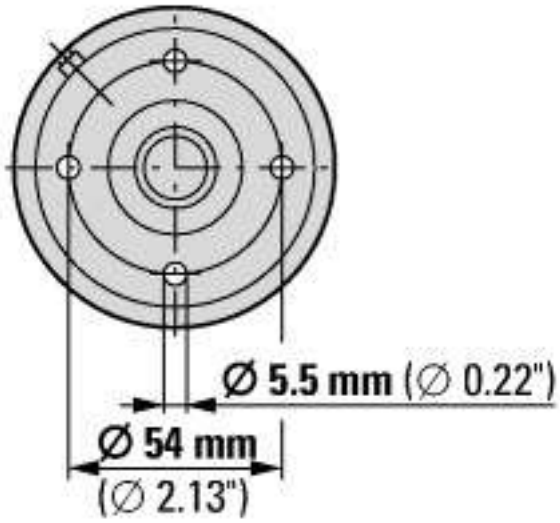

Additional product information (links)

IL047008ZU Signal towers SL4/7 with SWD connection

IL047008ZU Signal towers SL4/7 with SWD connection	ftp://ftp.moeller.net/DOCUMENTATION/AWA_INSTRUCTIONS/IL047008ZU2014_03.pdf
MN05006002Z-EN (AWB2723-1617) SmartWire-DT, The System	
MN05006002Z-DE (AWB2723-1617) SmartWire-DT, Das System - Deutsch	ftp://ftp.moeller.net/DOCUMENTATION/AWB_MANUALS/MN05006002Z_DE.pdf
MN05006002Z-EN (AWB2723-1617) SmartWire-DT, The System - English	ftp://ftp.moeller.net/DOCUMENTATION/AWB_MANUALS/MN05006002Z_EN.pdf
MN05006002Z-IT (AWB2723-1617) SmartWire-Darwin, Il sistema - italiano	ftp://ftp.moeller.net/DOCUMENTATION/AWB_MANUALS/MN05006002Z_IT.pdf
MN05006001Z-DE SmartWire-DT, Unit	
MN05006001Z-DE SmartWire-DT, Teilnehmer - Deutsch	ftp://ftp.moeller.net/DOCUMENTATION/AWB_MANUALS/MN05006001Z_DE.pdf
MN05006001Z-DE SmartWire-DT, Unit - English	ftp://ftp.moeller.net/DOCUMENTATION/AWB_MANUALS/MN05006001Z_EN.pdf
MN05006001Z-DE SmartWire-DT, modulo - italiano	ftp://ftp.moeller.net/DOCUMENTATION/AWB_MANUALS/MN05006001Z_IT.pdf

© 07/2014 by Eaton Industries GmbH