Max. 270 m³/h

S-Panther

DC axial fans

☐ 92 x 38 mm



- **Material:** Housing: GRP[1] (PBT)
  Impeller: GRP[1] (PA)
- **Direction of air flow:** Exhaust over struts
- **Direction of rotation:** Clockwise, looking towards rotor
- **Connection:** Via single wires AWG 22, TR 64
- **Weight:** 240 g

- **Possible special versions:**
  (See chapter DC fans - specials)
  - Speed signal
  - Go / NoGo alarm
  - External temperature sensor
  - Internal temperature sensor
  - PWM control input
  - Analog control input
  - Moisture protection
  - Salt spray protection
  - Degree of protection: IP 54 / IP 68

1) Fiberglass-reinforced plastic

Series 3250 J

Nominal data

Type	Air flow m³/h	Air flow cfm	Nominal voltage VDC	Voltage range VDC	Sound pressure level dB(A)	Sound power level Bel(A)	Sintec sleeve bearings □ / Ball bearings ■	Power consumption* Watts	Nominal speed rpm⁻¹	Temperature range °C	Service life L_{10} (40 °C) ebm-papst standard / Service life L_{10} (T_{max}) ebm-papst standard Hours	Life expectancy L_{10IPC} (40 °C) see page 17 Hours	Curve
3252 J/2 H3P	270	158	**12**	7...13.2	64	7.6	■	35.0	7 450	-20...+70	85 000 / 42 500	142 500	③
3254 J/2 H3P	270	158	**24**	14...26.4	64	7.6	■	35.0	7 450	-20...+70	85 000 / 42 500	142 500	③
3258 J/2 HP**	145	85	**48**	36...56.0	46	5.8	■	7.0	4 100	-20...+70	100 000 / 50 000	170 000	①
3258 J/2 HHP	235	138	**48**	36...56.0	59	7.0	■	24.3	6 650	-20...+70	90 000 / 45 000	152 500	②
3258 J/2 H3P	270	158	**48**	36...56.0	64	7.6	■	33.6	7 450	-20...+70	85 000 / 42 500	142 500	③

Subject to change

** On request

* Power consumption at free air flow. These values can be significantly higher in the operating point.

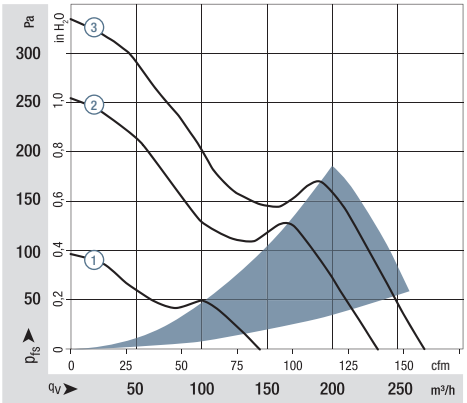

Air performance measured according to: ISO 5801.
Installation category A, without contact protection.
Noise: Total sound power level L_{WA} ISO 103002 measured on a hemisphere with a radius of 2 m.
Sound pressure level L_{pA} measured at 1 m distance from fan axis.
The values given are applicable only under the specified measuring conditions and may differ depending on the installation conditions.
In the event of deviation from the standard configuration, the parametersmust be checked after installation!
For detailed information see http://www.ebmpapst.com/general conditions

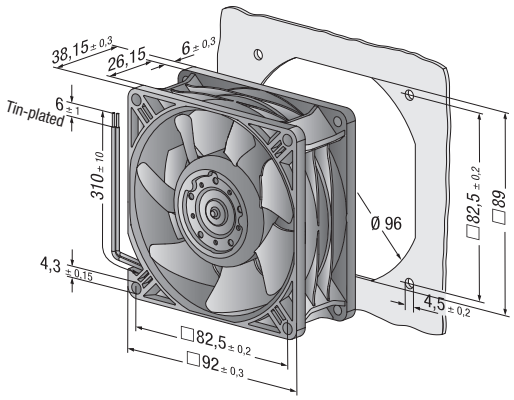

Finger guards from p. 242

ebmpapst