Product data sheet
Characteristics

XEP3S1W3B529
miniature limit switch - roller lever - 6.35 mm cable clip tags



Main

Range of product	OsiSense XC
Series name	Special format
Product or component type	Microswitch
Device short name	XEP3
Detector design	Miniature, DIN 41635 A format
Head type	Plunger head
Lever material	Glass reinforced polyamide roller Stainless steel
Lever fixing position	B
Movement of operating head	Linear
Type of operator	Roller lever
Switch actuation	Horizontal
Type of approach	Lateral approach
Electrical connection	6.35 mm cable clip tags
Contacts type and composition	1 C/O standard
Contact operation	Snap action
Contacts material	AgNi

Complementary

Body material	Polyester
Maximum force for tripping	0.2 N lever fixing position in A 0.4 N lever fixing position in B 0.53 N lever fixing position in C
Minimum release force	0.05 N lever fixing position in A 0.1 N lever fixing position in B 0.13 N lever fixing position in C
Maximum permissible end of travel force	10 N lever fixing position in B 13 N lever fixing position in C 5 N lever fixing position in A
Tripping point	20.5 Mm lever fixing position in A 20.5 Mm lever fixing position in B 20.5 mm lever fixing position in C
Maximum differential travel	0.53 Mm lever fixing position in C 0.7 Mm lever fixing position in B 1.4 mm lever fixing position in A
Minimum over travel	1.8 Mm lever fixing position in C 2.4 Mm lever fixing position in B 4.8 mm lever fixing position in A
Inter contact distance	0.4 mm
Contact code designation	B300, AC-15 (Ue = 240 V, Ie = 1.5 A) conforming to EN/IEC 60947-5-1 appendix A R300, DC-13 (Ue = 250 V, Ie = 0.1 A) conforming to EN/IEC 60947-5-1 appendix A
[Ith] conventional free air thermal current	15 A at 250 V 50/60 Hz
Mechanical durability	20000000 cycles
Width	10 mm
Height	16 mm
Depth	28 mm

The information provided in this documentation contains general descriptions and/or technical characteristics of the performance of the products contained herein.
This documentation is not intended as a substitute for and is not to be used for determining suitability or reliability of these products for specific user applications.
It is the duty of any such user or integrator to perform the appropriate and complete risk analysis, evaluation and testing of the products with respect to the relevant specific application or use thereof.
Neither Schneider Electric Industries SAS nor any of its affiliates or subsidiaries shall be responsible or liable for misuse of the information contained herein.

Net weight	6.6 g
Terminals description ISO n°1	(1-2-4)OC

Environment

IP degree of protection	IP40
Ambient air temperature for operation	-25…125 °C
Marking	CE
Standards	EN 61058 IEC 60947-5-1 EN 60947-5-1 UL 1054 CURus

Packing Units

Package 1 Weight	7 g
Package 2 Weight	70 g
Package 3 Weight	1.62 kg

Offer Sustainability

Sustainable offer status	Green Premium product
REACh Regulation	REACh Declaration
EU RoHS Directive	Pro-active compliance (Product out of EU RoHS legal scope) EU RoHS Declaration
Mercury free	Yes
RoHS exemption information	Yes
Environmental Disclosure	Product Environmental Profile

Contractual warranty

Warranty	18 months

Dimensions

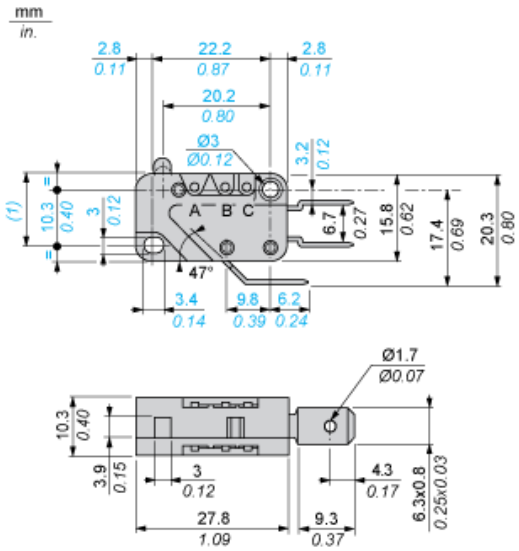

(1) 13.2 max.

Wiring Diagram

Single-pole CO Snap Action

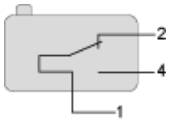

1 : Black
2 : Grey
4 : Blue

Operating Curves

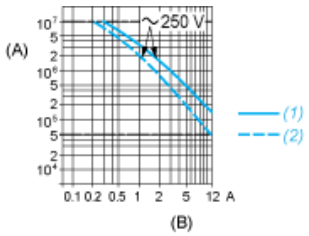

(A) Number of cycles
(B) Current
1 : Resistive circuit
2 : Inductive circuit